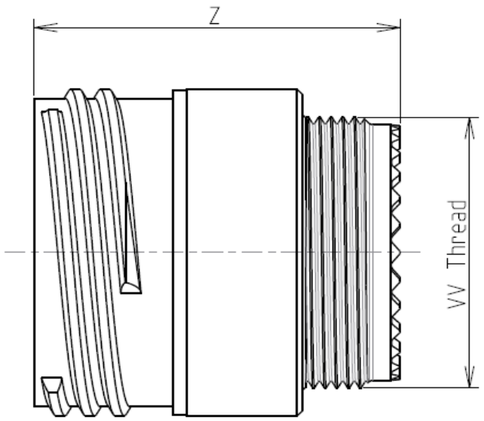

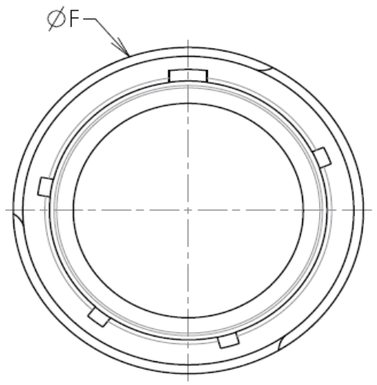

Keying Shown as example

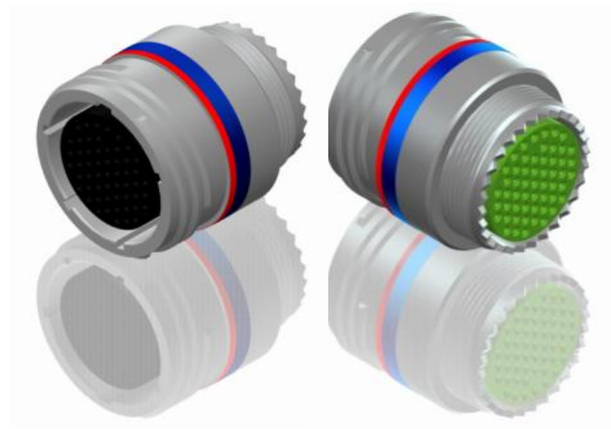

LAYOUT SHOWN AS EXAMPLE

CHARACTERISTICS

-Standard : Based on MIL-DTL-38999 Series III
-Shell Material : Aluminium
-Shell Plating : Nickel
-Insulator : Thermoplastic
-Contacts : Copper Alloy
-Seals & Grommet : Silicon Elastomer
-Contact Plating : Gold over copper Alloy 0.8µm minimum
-Durability : 500 Mating cycles
-Delivered with Souriau contacts and Accessories

-Temperature Range : -65°C to +200°C
-Salt Spray : 48 hours

Connector dimension	
Dim	**Nominal**
F	41.3 Max
Z	31.5 Max
VV THREAD	M37x1-6g

SOURIAU shall not be liable for any non-conformity or damage due to a use of the Products which does not comply with the Specifications issued by either of the Parties or by a third party (professional recommendation, technical notice.)

Country	Jurisdiction & Control List
FR	Not Listed

PN: 8D125F41SE

ISS	DATE	Latest modification - by	MOD N°
A	22-09-2016	First Release	

Designed By: Date: **CUSTOMER DRAWING**

TITLE Aluminium Inline plug 8D series

SCALE NA | General linear Tolerances: ±-- | NPRDS / PROJECT **859**

SOURIAU WWW.SOURIAU.COM

This document is the property of SOURIAU it must not be reproduced or communicated without permission

FORMAT A3 | SOURIAU DRG N° 8D125F41SE-C | SHEET 1/2

BASIC SERIES:	8D	1	-	25	F	41	S	E

SHELL TYPE : In line Receptacle
CONTACT TYPE : Standard Crimp Contact
SHELL SIZE : 25
PLATING : F = Nickel
CONTACT LAYOUT : 25-41
CONTACT TYPE : SOCKET(500 Matings)
ORIENTATION : E

Contact Layout

41

22#22D, 3#20
11#16, 2#12
3#8 Triax

25-41					
Ctc	X	Y	Ctc	X	Y
A	0	10.79	Y	-5.37	7.92
B	7.09	11.34	Z	3.32	5.72
C	10.77	7.92	a	7.96	-0.42
D	12.94	3.39	b	0	-6.6
E	13.27	-1.62	c	-7.96	-0.42
F	8.17	-6.44	d	-3.32	5.72
G	4.67	-12.53	e	0	4.48
H	0	-13.37	f	3.02	3.07
J	-4.67	-12.53	g	5.32	0.005
K	-8.17	-6.44	h	3.7	-2.43
L	-13.27	-1.62	i	2.38	-4.74
M	-12.94	3.39	j	-2.38	-4.74
N	-10.77	7.92	k	-3.7	-2.43
P	-7.09	11.34	m	-5.32	0.005
R	5.37	7.92	n	-3.02	3.07
S	7.32	3.91	p	0	1.81
T	10.39	0.67	q	2.59	-0.01
U	1.77	-9.66	r	0	-3.53
V	-1.77	-9.66	s	-2.59	-0.01
W	-10.39	0.67	t	0	-0.86
X	-7.32	3.91			

SOURIAU shall not be liable for any non-conformity or damage
due to a use of the Products which does not comply with
the Specifications issued by either of the Parties or by a third party
(professional recommendation, technical notice.)

Country	Jurisdiction & Control List
FR	Not Listed

PN: 8D125F41SE

ISS	DATE	Latest modification - by	MOD N°
A	22-09-2016	First Release	

Designed By: Date: **CUSTOMER DRAWING**

TITLE Aluminium Inline plug 8D series

SCALE NA

General linear Tolerances: ±--

NPRDS / PROJECT **859**

SOURIAU WWW.SOURIAU.COM

This document is the property of SOURIAU
it must not be reproduced or communicated without permission

FORMAT A3

SOURIAU DRG N° 8D125F41SE-C

SHEET 2/2