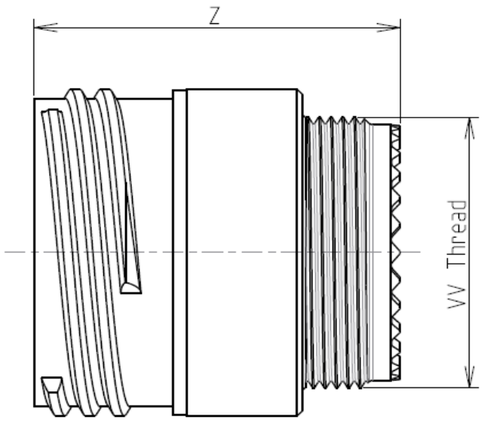

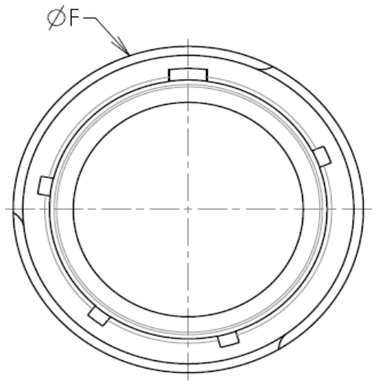

Keying Shown as example

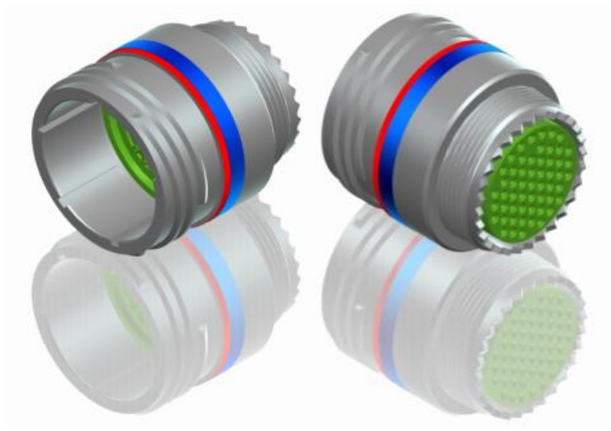

LAYOUT SHOWN AS EXAMPLE

CHARACTERISTICS

-Standard : Based on MIL-DTL-38999 Series III
-Shell Material : Aluminium
-Shell Plating : Nickel
-Insulator : Thermoplastic
-Contacts : Copper Alloy
-Seals & Grommet : Silicon Elastomer
-Contact Plating : Gold over copper Alloy 0.8µm minimum
-Durability : 500 Mating cycles
-Delivered with Souriau contacts and Accessories

-Temperature Range : -65°C to +200°C
-Salt Spray : 48 hours

Connector dimension	
Dim	**Nominal**
F	41.3 Max
Z	31.5 Max
VV THREAD	M37x1-6g

SOURIAU shall not be liable for any non-conformity or damage due to a use of the Products which does not comply with the Specifications issued by either of the Parties or by a third party (professional recommendation, technical notice.)

Country	Jurisdiction & Control List
FR	Not Listed

PN: 8D125F29AC

ISS	DATE	Latest modification - by	MOD N°
A	22-09-2016	First Release	

Designed By: Date: **CUSTOMER DRAWING**

TITLE Aluminium Inline plug 8D series

SCALE NA | General linear Tolerances: ±-- | NPRDS / PROJECT **859**

SOURIAU WWW.SOURIAU.COM

This document is the property of SOURIAU it must not be reproduced or communicated without permission

FORMAT A3 | SOURIAU DRG N° 8D125F29AC-C | SHEET 1/2

BASIC SERIES: 8D	1	-	25	F	29	A	C	

SHELL TYPE : In line Receptacle
CONTACT TYPE : Standard Crimp Contact
SHELL SIZE : 25
PLATING : F = Nickel

ORIENTATION : C
CONTACT TYPE : PIN(500 Matings)
CONTACT LAYOUT : 25-29

Contact Layout

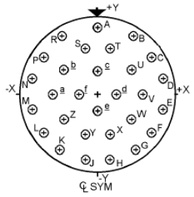

Contacts (Insert arrangement 25-29)					
Contact position ID	Location X-axis (mm)	Location Y-axis (mm)	Contact position ID	Location X-axis (mm)	Location Y-axis (mm)
A	+.000 (0.00)	+.481 (12.22)	S	-.091 (2.31)	+.321 (8.15)
B	+.258 (6.55)	+.406 (10.31)	T	+.091 (2.31)	+.321 (8.15)
C	+.395 (10.03)	+.277 (7.04)	U	+.228 (5.79)	+.194 (4.93)
D	+.469 (11.91)	+.109 (2.77)	V	+.319 (8.10)	+.000 (0.00)
E	+.460 (11.01)	-.100 (2.77)	W	+.240 (6.10)	-.181 (4.60)
F	+.395 (10.03)	-.277 (7.04)	X	+.091 (2.31)	-.290 (7.37)
G	+.263 (6.68)	-.406 (10.31)	Y	-.091 (2.31)	-.290 (7.37)
H	+.091 (2.31)	-.472 (11.99)	Z	-.240 (6.10)	-.181 (4.60)
J	-.091 (2.31)	-.472 (11.99)	a	-.319 (8.10)	+.000 (0.00)
K	-.263 (6.68)	-.406 (10.31)	b	-.228 (5.79)	+.194 (4.93)
L	-.395 (10.03)	-.277 (7.04)	c	+.000 (0.00)	+.161 (4.09)
M	-.469 (11.91)	-.109 (2.77)	d	+.134 (3.40)	+.000 (0.00)
N	-.469 (11.91)	+.109 (2.77)	e	+.000 (0.00)	-.130 (3.30)
P	-.395 (10.03)	+.277 (7.04)	f	-.134 (3.40)	+.000 (0.00)
R	-.258 (6.55)	+.406 (10.31)	---	---	---

Shell size	Arrangement no.	Number of contacts	Size contacts	Service rating	Contact location	Supersedes
25	-29	29	16	I	All	MS20057-29

SOURIAU shall not be liable for any non-conformity or damage
due to a use of the Products which does not comply with
the Specifications issued by either of the Parties or by a third party
(professional recommendation, technical notice.)

Country	Jurisdiction & Control List
FR	Not Listed

PN: 8D125F29AC

ISS	DATE	Latest modification - by	MOD N°
A	22-09-2016	First Release	

Designed By: Date: **CUSTOMER DRAWING**

TITLE Aluminium Inline plug 8D series

SCALE NA

General linear Tolerances: ±--

NPRDS / PROJECT **859**

SOURIAU

WWW.SOURIAU.COM

This document is the property of SOURIAU
it must not be reproduced or communicated without permission

FORMAT A3

SOURIAU DRG N° 8D125F29AC-C

SHEET 2/2