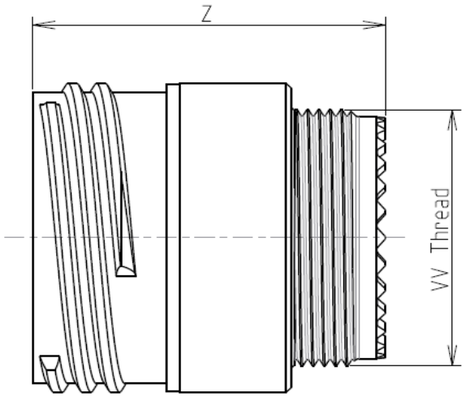

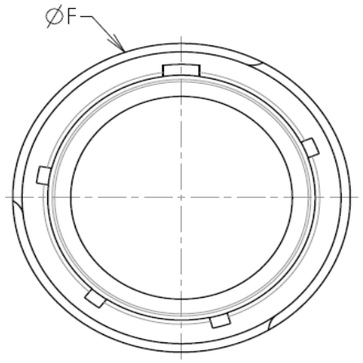

Keying Shown as example

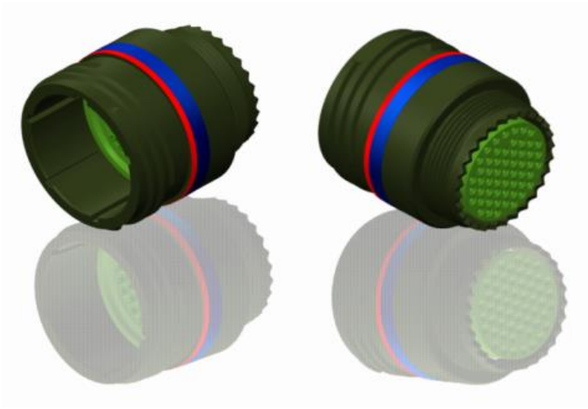

LAYOUT SHOWN AS EXAMPLE

CHARACTERISTICS

-Standard : Based on MIL-DTL-38999 Series III
-Shell Material : Aluminium
-Shell Plating : Olive drab Cadmium
-Insulator : Thermoplastic
-Contacts : Copper Alloy
-Seals & Grommet : Silicon Elastomer
-Contact Plating : Gold over copper Alloy 0.8µm minimum
-Durability : 500 Mating cycles
-Delivered with Souriau contacts and Accessories
-Temperature Range : -65°C to +175°C
-Salt Spray : 500 hours

Connector dimension	
Dim	**Nominal**
F	30.15 Max
Z	31.5 Max
VV THREAD	M25x1-6g

SOURIAU shall not be liable for any non-conformity or damage
due to a use of the Products which does not comply with
the Specifications issued by either of the Parties or by a third party
(professional recommendation, technical notice.)

Country	Jurisdiction & Control List
FR	Not Listed

PN: 8D117W35AD

A	23-09-2016	First Release	
ISS	DATE	Latest modification - by	MOD N°

Designed By: Date: **CUSTOMER DRAWING**

TITLE Aluminium Inline plug 8D series

SCALE NA		General linear Tolerances: ±--	NPRDS / PROJECT **859**
SOURIAU	WWW.SOURIAU.COM	This document is the property of SOURIAU it must not be reproduced or communicated without permission	
FORMAT A3	SOURIAU DRG N° 8D117W35AD-C		SHEET 1/2

BASIC SERIES:	8D	1	-	17	W	35	A	D
SHELL TYPE : In line Receptacle								
CONTACT TYPE : Standard Crimp Contact								
SHELL SIZE : 17								
PLATING : W = Olive drab Cadmium								

ORIENTATION : D
CONTACT TYPE : PIN(500 Matings)
CONTACT LAYOUT : 17-35

Contact Layout

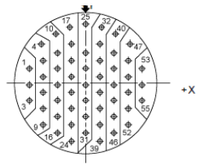

Contacts (Insert arrangement 17-35)					
Contact position ID	Location		Contact position ID	Location	
	X-axis (mm)	Y-axis (mm)		X-axis (mm)	Y-axis (mm)
1	-.312 (7.92)	+.086 (2.18)	29	.000 (0.00)	-.094 (2.39)
2	-.312 (7.92)	-.004 (0.10)	30	.000 (0.00)	-.184 (4.67)
3	-.312 (7.92)	-.094 (2.39)	31	.000 (0.00)	-.274 (0.90)
4	-.242 (6.15)	+.221 (5.61)	32	+.089 (2.26)	+.316 (8.03)
5	-.234 (5.94)	+.131 (3.33)	33	+.078 (1.98)	+.221 (5.61)
6	-.234 (5.94)	+.041 (1.04)	34	+.078 (1.98)	+.131 (3.33)
7	-.234 (5.94)	-.049 (1.24)	35	+.078 (1.98)	+.041 (1.04)
8	-.234 (5.94)	-.139 (3.53)	36	+.078 (1.98)	-.049 (1.24)
9	-.234 (5.94)	-.229 (5.82)	37	+.078 (1.98)	-.139 (3.53)
10	-.172 (4.37)	+.279 (7.09)	38	+.078 (1.98)	-.229 (5.82)
11	-.156 (3.96)	+.176 (4.47)	39	+.078 (1.98)	-.319 (8.10)
12	-.156 (3.96)	+.086 (2.18)	40	+.172 (4.37)	+.279 (7.09)
13	-.156 (3.96)	-.004 (0.10)	41	+.156 (3.96)	+.176 (4.47)
14	-.156 (3.96)	-.094 (2.39)	42	+.156 (3.96)	+.086 (2.18)
15	-.156 (3.96)	-.184 (4.67)	43	+.156 (3.96)	-.004 (0.10)
16	-.156 (3.96)	-.274 (6.96)	44	+.156 (3.96)	-.094 (2.39)
17	-.089 (2.26)	+.316 (8.03)	45	+.156 (3.96)	-.184 (4.67)
18	-.078 (1.98)	+.221 (5.61)	46	+.156 (3.96)	-.274 (6.96)

Contacts (Insert arrangement 17-35)					
Contact position ID	Location		Contact position ID	Location	
	X-axis (mm)	Y-axis (mm)		X-axis (mm)	Y-axis (mm)
19	-.078 (1.98)	+.131 (3.33)	47	+.242 (6.15)	+.221 (5.61)
20	-.078 (1.98)	+.041 (1.04)	48	+.234 (5.94)	+.131 (3.33)
21	-.078 (1.98)	-.049 (1.24)	49	+.234 (5.94)	+.041 (1.04)
22	-.078 (1.98)	-.139 (3.53)	50	+.234 (5.94)	-.049 (1.24)
23	-.078 (1.98)	-.229 (5.82)	51	+.234 (5.94)	-.139 (3.53)
24	-.078 (1.98)	-.319 (8.10)	52	+.234 (5.94)	-.229 (5.82)
25	.000 (0.00)	+.329 (8.36)	53	+.312 (7.92)	+.086 (2.18)
26	.000 (0.00)	+.176 (4.47)	54	+.312 (7.92)	-.004 (0.10)
27	.000 (0.00)	+.086 (2.18)	55	+.312 (7.92)	-.094 (2.39)
28	.000 (0.00)	-.004 (0.10)	---	---	---

Shell size	Arrangement no.	Number of contacts	Size contacts	Service rating	Contact location	Supersedes
17	-35	55	22D	M	All	MS27529-35

SOURIAU shall not be liable for any non-conformity or damage
due to a use of the Products which does not comply with
the Specifications issued by either of the Parties or by a third party
(professional recommendation, technical notice.)

Country	Jurisdiction & Control List
FR	Not Listed

PN: 8D117W35AD

ISS	DATE	Latest modification - by	MOD N°
A	23-09-2016	First Release	

Designed By: Date: **CUSTOMER DRAWING**

TITLE Aluminium Inline plug 8D series

SCALE NA

General linear Tolerances: ±--

NPRDS / PROJECT **859**

SOURIAU WWW.SOURIAU.COM

This document is the property of SOURIAU
it must not be reproduced or communicated without permission

FORMAT A3

SOURIAU DRG N° 8D117W35AD-C