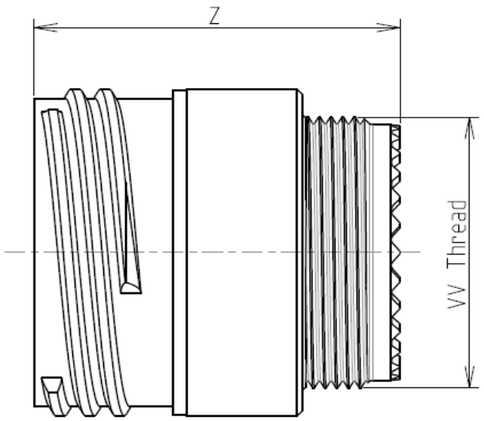

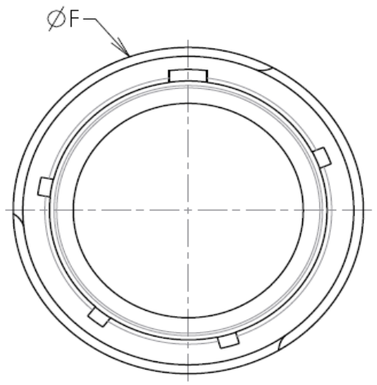

Keying Shown as example

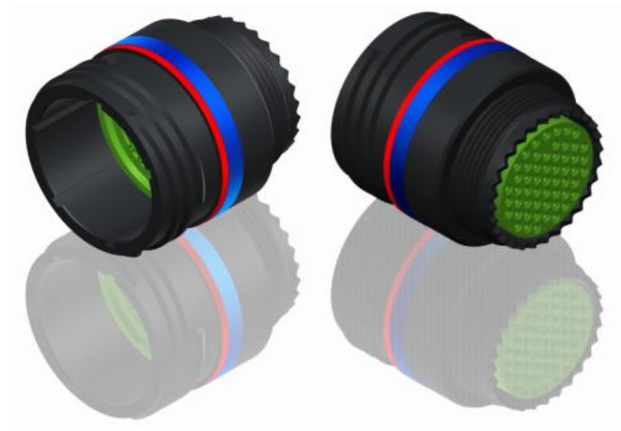

LAYOUT SHOWN AS EXAMPLE

CHARACTERISTICS

-Standard : Based on MIL-DTL-38999 Series III
-Shell Material : Aluminium
-Shell Plating : Black Zinc Nickel
-Insulator : Thermoplastic
-Contacts : Copper Alloy
-Seals & Grommet : Silicon Elastomer
-Contact Plating : Gold over copper Alloy 0.8µm minimum
-Durability : 500 Mating cycles
-Delivered with Souriau contacts and Accessories

-Temperature Range : -65°C to +175°C
-Salt Spray : 500 hours

Connector dimension	
Dim	**Nominal**
F	22.25 Max
Z	31.5 Max
VV THREAD	M18x1-6g

SOURIAU shall not be liable for any non-conformity or damage due to a use of the Products which does not comply with the Specifications issued by either of the Parties or by a third party (professional recommendation, technical notice.)

Country	Jurisdiction & Control List
FR	Not Listed

PN: 8D113Z98AA

A	27-09-2016	First Release	
ISS	DATE	Latest modification - by	MOD N°

Designed By: Date: **CUSTOMER DRAWING**

TITLE Aluminium Inline plug 8D series

SCALE NA | General linear Tolerances: ±-- | NPRDS / PROJECT **859**

SOURIAU WWW.SOURIAU.COM

This document is the property of SOURIAU it must not be reproduced or communicated without permission

FORMAT A3 | SOURIAU DRG N° 8D113Z98AA-C | SHEET 1/2

BASIC SERIES:	8D	1	-	13	Z	98	A	A	

SHELL TYPE : In line Receptacle
CONTACT TYPE : Standard Crimp Contact
SHELL SIZE : 13
PLATING : Z = Black Zinc Nickel

ORIENTATION : A
CONTACT TYPE : PIN(500 Matings)
CONTACT LAYOUT : 13-98

Contact Layout

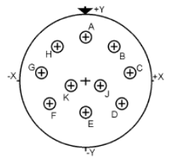

Contacts (Insert arrangement 13-98)		
Contact position ID	Location	
	X-axis (mm)	Y-axis (mm)
A	+.000 (0.00)	+.195 (4.95)
B	+.125 (3.18)	+.150 (3.81)
C	+.193 (4.90)	+.030 (0.76)
D	+.164 (4.17)	-.105 (2.67)
E	+.000 (0.00)	-.135 (3.43)
F	-.164 (4.17)	-.105 (2.67)
G	-.193 (4.90)	+.030 (0.76)
H	-.125 (3.18)	+.150 (3.81)
J	+.065 (1.65)	-.015 (0.38)
K	-.065 (1.65)	-.015 (0.38)

Shell size	Arrangement no.	Number of contacts	Size contacts	Service rating	Contact location	Supersedes
13	-98	10	20	I	All	MS20051-98

SOURIAU shall not be liable for any non-conformity or damage
due to a use of the Products which does not comply with
the Specifications issued by either of the Parties or by a third party
(professional recommendation, technical notice.)

Country	Jurisdiction & Control List
FR	Not Listed

PN: 8D113Z98AA

ISS	DATE	Latest modification - by	MOD N°
A	27-09-2016	First Release	

Designed By: Date: **CUSTOMER DRAWING**

TITLE Aluminium Inline plug 8D series

SCALE NA

General linear Tolerances: ±--

NPRDS / PROJECT **859**

SOURIAU WWW.SOURIAU.COM

This document is the property of SOURIAU
it must not be reproduced or communicated without permission

FORMAT A3

SOURIAU DRG N° 8D113Z98AA-C

SHEET 2/2