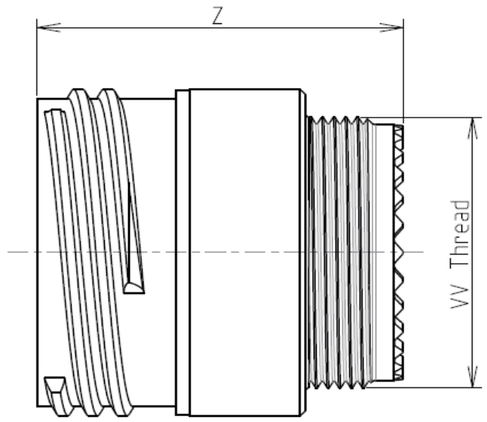

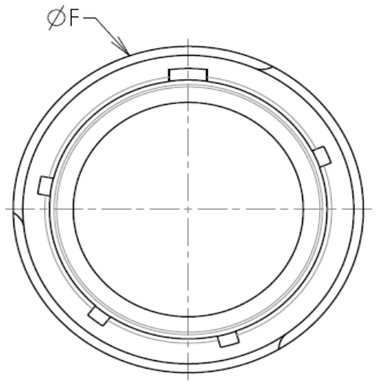

Keying Shown as example

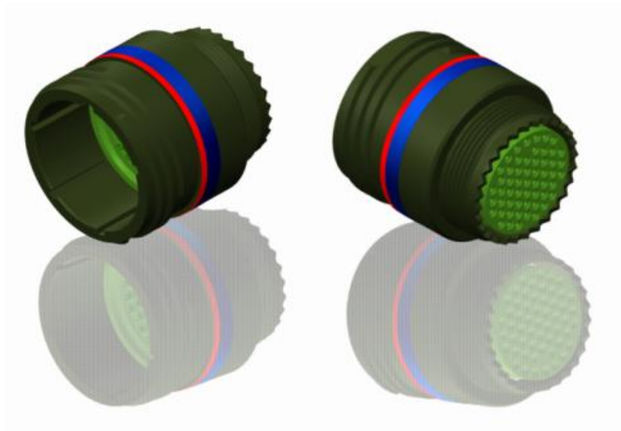

LAYOUT SHOWN AS EXAMPLE

CHARACTERISTICS

-Standard : Based on MIL-DTL-38999 Series III
-Shell Material : Aluminium
-Shell Plating : Olive drab Cadmium
-Insulator : Thermoplastic
-Contacts : Copper Alloy
-Seals & Grommet : Silicon Elastomer
-Contact Plating : Gold over copper Alloy 0.8µm minimum
-Durability : 500 Mating cycles
-Delivered with Souriau contacts and Accessories
-Temperature Range : -65°C to +175°C
-Salt Spray : 500 hours

Connector dimension	
Dim	**Nominal**
F	22.25 Max
Z	31.5 Max
VV THREAD	M18x1-6g

SOURIAU shall not be liable for any non-conformity or damage
due to a use of the Products which does not comply with
the Specifications issued by either of the Parties or by a third party
(professional recommendation, technical notice.)

Country	Jurisdiction & Control List
FR	Not Listed

PN: 8D113W03AN

A	27-09-2016	First Release	
ISS	DATE	Latest modification - by	MOD N°

Designed By: Date: **CUSTOMER DRAWING**

TITLE Aluminium Inline plug 8D series

BASIC SERIES:	8D	1	-	13	W	03	A	N
SHELL TYPE : In line Receptacle								
CONTACT TYPE : Standard Crimp Contact								
SHELL SIZE : 13								
PLATING : W = Olive drab Cadmium								

ORIENTATION : N
CONTACT TYPE : PIN(500 Matings)
CONTACT LAYOUT : 13-03

SCALE		General linear Tolerances:	NPRDS / PROJECT
NA		±--	**859**

SOURIAU	WWW.SOURIAU.COM	This document is the property of SOURIAU it must not be reproduced or communicated without permission

FORMAT		SHEET
A3	SOURIAU DRG N° 8D113W03AN-C	1/2

Contact Layout

03



3#16

13-03		
Ctc	X	Y
A	2.39	1.47
B	0	-2.79
C	-2.39	1.47

SOURIAU shall not be liable for any non-conformity or damage
due to a use of the Products which does not comply with
the Specifications issued by either of the Parties or by a third party
(professional recommendation, technical notice.)

Country	Jurisdiction & Control List
FR	Not Listed

PN: 8D113W03AN

ISS	DATE	Latest modification - by	MOD N°
A	27-09-2016	First Release	

Designed By: Date: **CUSTOMER DRAWING**

TITLE Aluminium Inline plug 8D series

SCALE NA

General linear Tolerances: ±--

NPRDS / PROJECT **859**

SOURIAU WWW.SOURIAU.COM

This document is the property of SOURIAU
it must not be reproduced or communicated without permission

FORMAT A3

SOURIAU DRG N° 8D113W03AN-C

SHEET 2/2