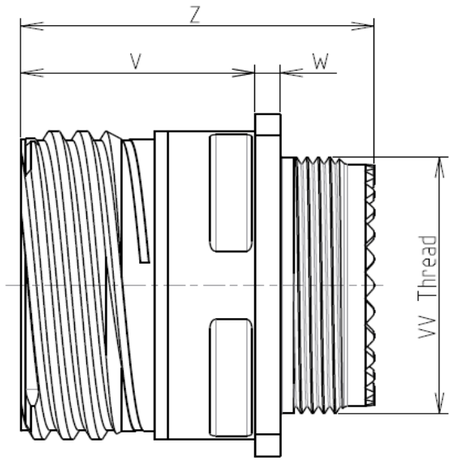

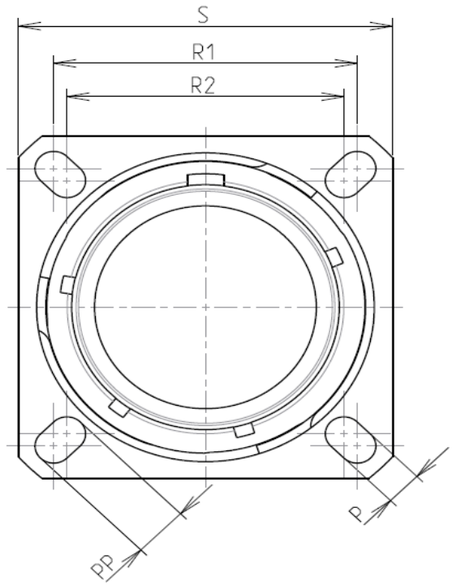

Keying Shown as example

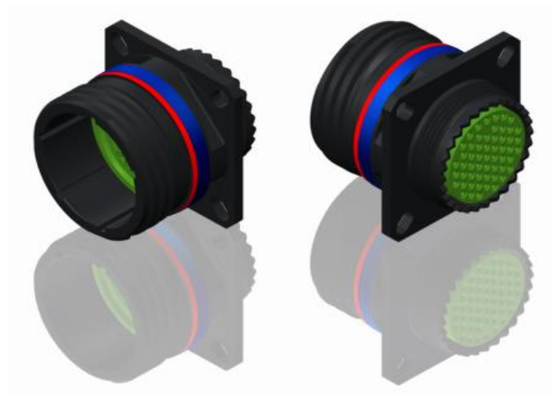

LAYOUT SHOWN AS EXAMPLE

CHARACTERISTICS

-Standard : Based on MIL-DTL-38999 Series III
-Shell Material : Aluminium
-Shell Plating : Black Zinc Nickel
-Insulator : Thermoplastic
-Contacts : Copper Alloy
-Seals & Grommet : Silicon Elastomer
-Contact Plating : Gold over copper Alloy 0.8µm minimum
-Durability : 500 Mating cycles
-Delivered with Souriau contacts and Accessories

-Temperature Range : -65°C to +175°C
-Salt Spray : 500 hours
-Mass : 51.41 g ± 10%

Connector dimension	
Dim	**Nominal**
P	3.91±0.2
PP	6.15±0.2
R1	38.1
R2	34.93
S	46±0.3
V	20.07+0/-1.25
W	2.1/3.2
Z	31.5 Max
VV THREAD	M37x1-6g

SOURIAU shall not be liable for any non-conformity or damage due to a use of the Products which does not comply with the Specifications issued by either of the Parties or by a third party (professional recommendation, technical notice.)

Country	Jurisdiction & Control List
FR	Not Listed

PN: 8D025Z37AN

ISS	DATE	Latest modification - by	MOD N°
A	10-10-2016	First Release	

Designed By: Date: **CUSTOMER DRAWING**

TITLE Aluminium Receptacle 8D series

SCALE NA | General linear Tolerances: ±-- | NPRDS / PROJECT **859**

SOURIAU WWW.SOURIAU.COM

This document is the property of SOURIAU it must not be reproduced or communicated without permission

FORMAT A3 | SOURIAU DRG N° 8D025Z37AN-C | SHEET 1/2

BASIC SERIES:	8D	0	-	25	Z	37	A	N

SHELL TYPE : Square Flange Receptacle
CONTACT TYPE : Standard Crimp Contact
SHELL SIZE : 25
PLATING : Z = Black Zinc Nickel

ORIENTATION : N
CONTACT TYPE : PIN(500 Matings)
CONTACT LAYOUT : 25-37

Contact Layout

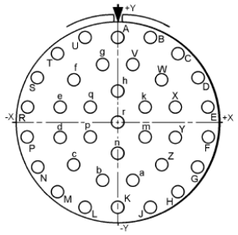

Contacts (Insert arrangement 25-37)					
Contact position ID	Location X-axis (mm)	Location Y-axis (mm)	Contact position ID	Location X-axis (mm)	Location Y-axis (mm)
A	+.000 (.00)	+.472 (11.99)	W	+.242 (6.15)	+.236 (5.99)
B	+.185 (4.70)	+.472 (11.99)	X	+.326 (8.28)	+.086 (2.18)
C	+.333 (8.46)	+.382 (9.70)	Y	+.326 (8.28)	-.086 (2.18)
D	+.441 (11.20)	+.249 (6.32)	Z	+.242 (6.15)	-.236 (5.99)
E	+.500 (12.70)	+.086 (2.18)	a	+.086 (2.18)	-.320 (8.13)
F	+.500 (12.70)	-.086 (2.18)	b	-.086 (2.18)	-.320 (8.13)
G	+.441 (11.20)	-.249 (6.32)	c	-.242 (6.15)	-.236 (5.99)
H	+.333 (8.46)	+.382 (9.70)	d	-.326 (8.28)	-.086 (2.18)
J	+.186 (4.72)	-.472 (11.99)	e	-.326 (8.28)	+.086 (2.18)
K	+.000 (.00)	-.472 (11.99)	f	-.242 (6.15)	+.236 (5.99)
L	-.186 (4.72)	-.472 (11.99)	g	-.086 (2.18)	+.320 (8.13)
M	-.333 (8.46)	-.382 (9.70)	h	+.000 (.00)	+.172 (4.37)
N	-.441 (11.20)	-.249 (6.32)	k	+.154 (3.91)	+.086 (2.18)
P	-.500 (12.70)	-.086 (2.18)	m	+.154 (3.91)	-.086 (2.18)
R	-.500 (12.70)	+.086 (2.18)	n	+.000 (.00)	-.172 (4.37)
S	-.441 (11.20)	+.249 (6.32)	p	-.154 (3.91)	-.086 (2.18)
T	-.333 (8.46)	+.382 (9.70)	q	-.154 (3.91)	+.086 (2.18)
U	-.186 (4.72)	+.472 (11.99)	r	+.000 (.00)	+.000 (.00)
V	+.086 (2.18)	+.320 (8.13)	---	---	---

Shell size	Arrangement no.	Number of contacts	Size contacts	Service rating	Contact location	Supersedes
25	-37	37	16	II	All	-----

Panel Cutout

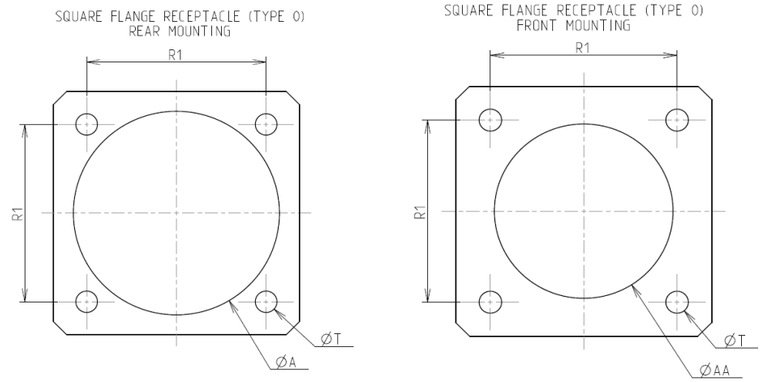

Dim	Nominal
ØA	42.47 min
ØAA	37.69 min
R1	38.1
ØT	3.81 ±0.13

SOURIAU shall not be liable for any non-conformity or damage
due to a use of the Products which does not comply with
the Specifications issued by either of the Parties or by a third party
(professional recommendation, technical notice.)

Country	Jurisdiction & Control List
FR	Not Listed

PN: 8D025Z37AN

ISS	DATE	Latest modification - by	MOD N°
A	10-10-2016	First Release	

Designed By: Date: **CUSTOMER DRAWING**

TITLE Aluminium Receptacle 8D series

SCALE NA | General linear Tolerances: ±-- | NPRDS / PROJECT **859**

SOURIAU | WWW.SOURIAU.COM | This document is the property of SOURIAU it must not be reproduced or communicated without permission

FORMAT A3 | SOURIAU DRG N° 8D025Z37AN-C | SHEET 2/2