MSM CS 19

Metal Switch with Ceramic Actuator, Switching Voltage up to 30 VDC / 250 VAC

See below:
Approvals and Compliances

Description

- Momentary action switch available in version: Standard (ST), with Lettering (LE), with Backlighting (BL)
- Single color or RGB illumination
- Choice from 7 colors for RGB variants Assembly method: clip micro-switch into the saddle, secure switch using mounting nut
- Equipped with flat-pin plugs to permit fast connection

Unique Selling Proposition

- Attractive tactile feedback
- High quality materials
- Long life span
- Single color or homogeneous multicolor illumination

Characteristics

- Housing material: high-quality stainless steel, actuator material: highly durable ceramic
- Variety of design options regarding size, colour, illumination, connection or lettering
- Switching voltage from 30 VDC to 250 VAC, switching current from 0.1 A to 10 A
- Backlighting optional, this means the complete actuator surface is fully illuminated
- IP-Protection: IP65 from front side to contact area, Micro-Switch is available in versions IP40 or IP67, moving actuator is rated IP40 to frontside
- For use in harsh environments (see technical data)

References

Alternative: Standard version MSM CS 22
Alternative: double-pole switch:
Alternative: switch with latching function: MSM LA 19
Alternative: Other diameter MSM CS 16
Alternative: switch with ring illumination: MSM 16; MSM 19; MSM 22; MSM 30

Weblinks

html data sheet, General Product Information, CAD-Drawings, Product News, Detailed request for product, Video

Technical Data

Electrical Data	
Switching Function	N.O. / N.C.
Number of Poles	1-pole
Supply Voltage	24 VDC
	5 VDC and 12 VDC variants (except for RGB) on request (MOQ 500 pieces)
Micro Switch 5 A / 125 VAC or 3 A / 250 VAC, IP40	
Contact Material	Ag
Switching Voltage	max. 125 / 250 VAC
Switching Current	max. 5 / 3 A
Rated Switching Capacity	750 W
Lifetime	0.2 million actuations at Rated Switching Capacity
Contact Resistance	< 30 mΩ
Insulation Resistance	> 100 MΩ
Duration of Bounce	< 5 ms
Micro Switch 0,1 A / 30 VDC, IP40	
Contact Material	Au
Switching Voltage	max. 30 VDC
Switching Current	max. 0.1 A
Rated Switching Capacity	3 W
Lifetime	0.2 million actuations at Rated Switching Capacity
Contact Resistance	< 50 mΩ
Insulation Resistance	> 100 MΩ
Duration of Bounce	< 5 ms
Micro Switch for Electrical Rating 10 A / 250 VAC (Protection Class IP40)	
Contact Material	Ag
Switching Voltage	max. 250 VAC
Switching Current	max. 10 A
Rated Switching Capacity	2500 W
Lifetime	0.05 million actuations at Rated Switching Capacity
Contact Resistance	< 30 mΩ
Insulation Resistance	> 100 MΩ
Duration of Bounce	< 5 ms
Micro Switch 5 A / 250 VAC, IP67	
Switching Voltage	max. 250 VAC
Switching Current	max. 5
Rated Switching Capacity	1250 W
Lifetime	0.05 million actuations at Rated Switching Capacity
Micro Switch 0,1 A / 250 VAC, IP67 - on request	
Switching Voltage	max. 250 VAC
Switching Current	max. 0.1
Rated Switching Capacity	25 W
Lifetime	0.05 million actuations at Rated Switching Capacity
Micro Switch 10 A / 250 VAC, IP67 - on request	
Switching Voltage	max. 250 VAC
Switching Current	max. 10 A
Rated Switching Capacity	2500 W
Lifetime	0.01 million actuations at Rated Switching Capacity

Mechanical Data	
Actuating Force	4.5 N
Actuating Travel	1.0 mm
Lifetime	1.5 million actuations
Shock Protection	IK 07
Mounting screw torque Plastic Nut	max. 4.5 Nm
Mounting screw torque Stainless Steel Nut	max. 12 Nm
Climatical Data	
Operating Temperature	-25 to +85 °C
Storage Temperature	-25 to +85 °C
IP Protection Class	IP65
Switching Unit	IP40
	IP67 optional
Salt Spray Test (acc. to DIN 50021-SS)	24 h / 48 h / 96 h Residence Time
Material	
Housings	Stainless Steel
Actuator	Ceramic (Zirconium Dioxide)
Seal Ring	NBR70
Switcher Collet	PA

Approvals and Compliances

Detailed information on product approvals, code requirements, usage instructions and detailed test conditions can be looked up in Details about Approvals

SCHURTER products are designed for use in industrial environments. They have approvals from independent testing bodies according to national and international standards. Products with specific characteristics and requirements such as required in the automotive sector according to IATF 16949, medical technology according to ISO 13485 or in the aerospace industry can be offered exclusively with customer-specific, individual agreements by SCHURTER.

Approvals

Approval Reference Type:

Approval Logo	Certification Body	Description
VDE		Low Voltage Directive 2014/35/EU Low Voltage Directive 2014/35/EU
VDE		VDE / ENEC Certificate Number (Omron): 40008425, 129246, 125256
UL	UL	UL / CSA File Number (Omron): E41515
VDE		VDE / ENEC Certificate Number (Marquardt): 097550
UL	UL	UL / CSA File Number (Marquardt): E41791
KEMA EUR	KEMA	KEMA / ENEC File Number (Cherry): 2089323.01
UL	UL	UL / CSA File Number (Cherry): E23301

Product standards

Product standards that are referenced

Organization	Design	Standard	Description
DIN	Designed according to	DIN EN 61058-1	Switches for appliances. Part 1. General requirements
UL	Designed according to	UL 1054	UL standard for safety special-use switches

Application standards

Application standards where the product can be used

Organization	Design	Standard	Description
IEC	Designed for applications acc.	IEC/UL 60950	IEC 60950-1 includes the basic requirements for the safety of information technology equipment.

Compliances

The product complies with following Guide Lines

Identification	Details	Initiator	Description
RoHS	RoHS	SCHURTER AG	EU Directive RoHS 2011/65/EU
REACH	REACH	SCHURTER AG	On 1 June 2007, Regulation (EC) No 1907/2006 on the Registration, Evaluation, Authorization and Restriction of Chemicals 1 (abbreviated as "REACH") entered into force.

Dimension [mm]

MSM 19 CS ST

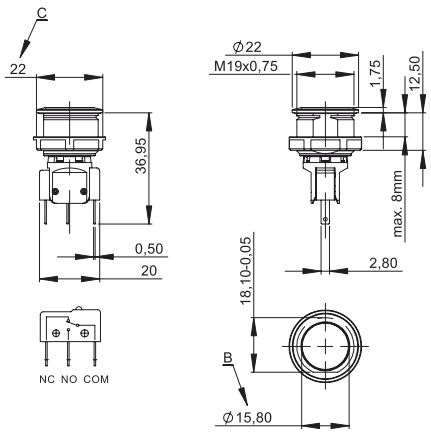

MSM 19 CS LE

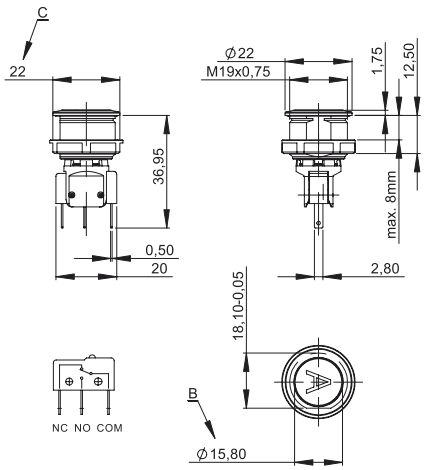

MSM 19 CS BL Single color

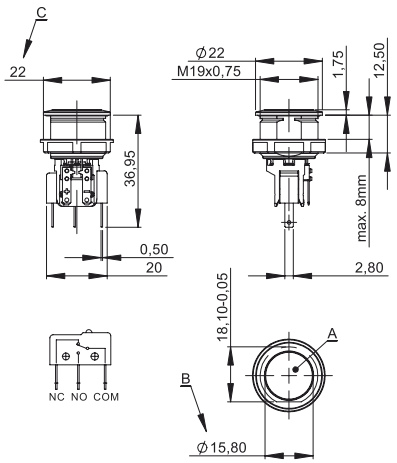

MSM 19 CS AI RGB

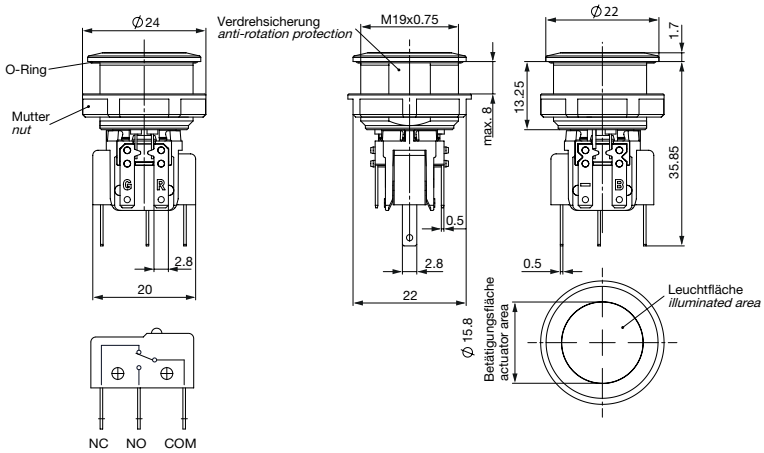

Legend
A = Illumination Area
B = Actuating Area
C = Width Across Flats
D = Nut

Tolerance Range

Actuator Tolerance Range

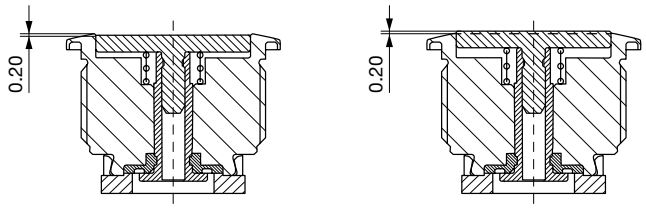

The mounting tolerance range of the actuator varies from 0.2 mm projection length and 0.2 mm short length to the housing edge. The slanting position of the actuator can range within this tolerance.

Dimension

MSM 19 CS ST

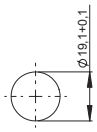

Drilling diagram

MSM 19 CS LE / MSM 19 CS BL

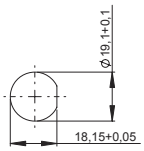

Drilling diagram

Assembly Instructions

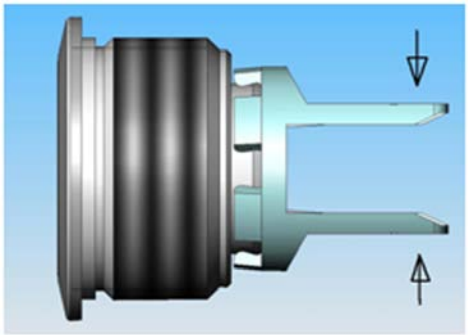

During assembly, the protruding bars of the holder should not be pressed together.

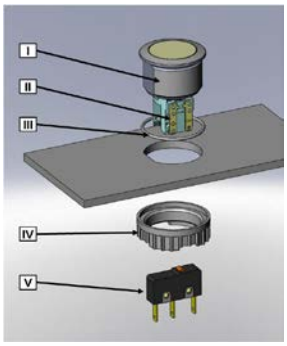

I Housing
II Flat Pin Terminal (Illumination)
III Gasket
IV Nut (Nut type see Dimensions)
V Module Switching Contact

Installation Instruction:
1.) Place the gasket accurately on the actuator housing. Then mount the actuator housing assembly into the panel.
2.) Tighten the screw nut according to the torque instructions.
3.) Clasp the module switching contact into the micro switch holder of the actuator housing.

Installation information:
1.) The power supply and the configuration of the flat pin terminals have to be installed correctly for the illumination and micro switch function.
2.) Insulate the terminals as required. Fully insulated plug-in sleeves are recommended.
3.) Installation instructions according to VDE-standard DIN VDE 0100-100 or alternatively IEC 60354 standard.

Diagrams

MSM CS ST / MSM CS LE

MSM CS BL Single color

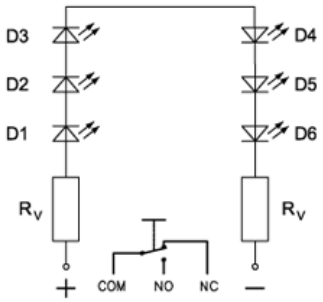

MSM RI / 24 V RGB

terminal assignment with resistors for 24 VDC

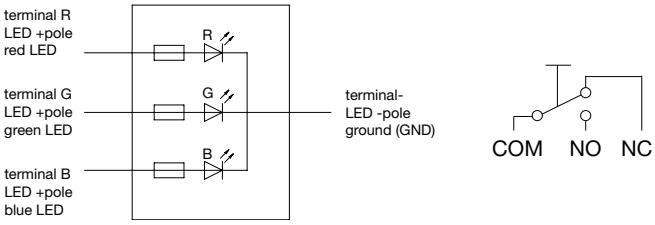

Lighting type	Active terminal R)	Active terminal G)	Active terminal B)	Resulting Color
Singlecolor	x			Red
Singlecolor		x		Green
Singlecolor			x	Blue
RGB Additive 2	x	x		Yellow
RGB Additive 2	x		x	Magenta
RGB Additive 2		x	x	Cyan
RGB Additive 3	x	x	x	White

Illumination options for RGB

Lettering

The last three digits in the order number define the lettering:	
000	No Lettering
001-074	Standard Lettering
101-	Customized Lettering

Lettering Colour of Laser Lettering

Material	Lettering Colour	
Ceramic	black	Filled letters

Order Index Lettering

Laser Marking			
001 = **A**	021 = **U**	041 = **÷**	061 = **EIN**
002 = **B**	022 = **V**	042 = ✳	062 = **AUS**
003 = **C**	023 = **W**	043 = **=**	063 = **AUF**
004 = **D**	024 = **X**	044 = #	064 = **AB**
005 = **E**	025 = **Y**	045 = ↔	065 = **ON**
006 = **F**	026 = **Z**	046 = ↕	066 = **OFF**
007 = **G**	027 = **0**	047 = →	067 = **UP**
008 = **H**	028 = **1**	048 = ←	068 = **DOWN**
009 = **I**	029 = **2**	049 = ↓	069 = **HIGH**
010 = **J**	030 = **3**	050 = ↑	070 = **LOW**
011 = **K**	031 = **4**	051 = %	071 = **ON/OFF**
012 = **L**	032 = **5**	052 = √	072 = **START**
013 = **M**	033 = **6**	053 = **CTRL**	073 = **RESET**
014 = **N**	034 = **7**	054 = **RETURN**	074 = ⏻
015 = **O**	035 = **8**	055 = **SHIFT**	075 = 💡
016 = **P**	036 = **9**	056 = **LOCK**	076 = 🔔
017 = **Q**	037 = **+**	057 = **STOP**	077 = ⏻
018 = **R**	038 = **-**	058 = **ENTER**	
019 = **S**	039 = **.**	059 = **BACK**	
020 = **T**	040 = x	060 = **LINE**	

All Variants

Diameter	Switching Current	Switching Voltage	Illumination, LED	Housing Material	Torsion Protection Housing/Actuator	Config. Code	Order Number
[mm]	[A]	[VAC/ VDC]					
19	0.1	30 VDC	Backlighted, bright red, 24 VDC	Stainless Steel	yes / yes	MSM 19 CS BL bright red	1241.8412
19	0.1	30 VDC	Backlighted, bright green, 24 VDC	Stainless Steel	yes / yes	MSM 19 CS BL bright green	1241.8413
19	0.1	30 VDC	Backlighted, bright blue, 24 VDC	Stainless Steel	yes / yes	MSM 19 CS BL bright blue	1241.8415
19	0.1	30 VDC	Backlighted, bright white, 24 VDC	Stainless Steel	yes / yes	MSM 19 CS BL bright white	1241.8416
19	10	250 VAC	Backlighted, bright red, 24 VDC	Stainless Steel	yes / yes	MSM 19 CS BL bright red	1241.8448
19	10	250 VAC	Backlighted, bright green, 24 VDC	Stainless Steel	yes / yes	MSM 19 CS BL bright green	1241.8449
19	10	250 VAC	Backlighted, bright blue, 24 VDC	Stainless Steel	yes / yes	MSM 19 CS BL bright blue	1241.8451
19	10	250 VAC	Backlighted, bright white, 24 VDC	Stainless Steel	yes / yes	MSM 19 CS BL bright white	1241.8452
19	6	250 VAC	Backlighted, red, 24 VDC	Stainless Steel	yes / yes	MSM 19 CS BL red	1241.7026.1181000
19	6	250 VAC	Backlighted, green, 24 VDC	Stainless Steel	yes / yes	MSM 19 CS BL green	1241.7026.1182000

Diameter	Switching Current	Switching Voltage	Illumination, LED	Housing Material	Torsion Protection Housing/Actuator	Config. Code	Order Number
[mm]	[A]	[VAC/ VDC]					
19	6	250 VAC	Backlighted, blue, 24 VDC	Stainless Steel	yes / yes	MSM 19 CS BL blue	1241.7026.1184000
19	0.1	30 VDC	non-illuminated	Stainless Steel	no / yes	MSM 19 CS ST	1241.7021.1110000
19	5 / 3	125 / 250 VAC	non-illuminated	Stainless Steel	no / yes	MSM 19 CS ST	1241.7021.1120000
19	10	250 VAC	non-illuminated	Stainless Steel	no / yes	MSM 19 CS ST	1241.7021.1130000
19	6	250 VAC	non-illuminated	Stainless Steel	no / yes	MSM 19 CS ST	1241.7021.1180000
19	0.1	30 VDC	Backlighted, red, 24 VDC	Stainless Steel	yes / yes	MSM 19 CS BL red	1241.7026.1111000
19	0.1	30 VDC	Backlighted, green, 24 VDC	Stainless Steel	yes / yes	MSM 19 CS BL green	1241.7026.1112000
19	0.1	30 VDC	Backlighted, green, 24 VDC	Stainless Steel	yes / yes	MSM 19 CS BL green	1241.7026.1112074
19	0.1	30 VDC	Backlighted, blue, 24 VDC	Stainless Steel	yes / yes	MSM 19 CS BL blue	1241.7026.1114000
19	0.1	30 VDC	Backlighted, blue, 24 VDC	Stainless Steel	yes / yes	MSM 19 CS BL blue	1241.7026.1114076
19	5 / 3	125 / 250 VAC	Backlighted, red, 24 VDC	Stainless Steel	yes / yes	MSM 19 CS BL red	1241.7026.1121000
19	5 / 3	125 / 250 VAC	Backlighted, red, 24 VDC	Stainless Steel	yes / yes	MSM 19 CS BL red	1241.7026.1121072
19	5 / 3	125 / 250 VAC	Backlighted, red, 24 VDC	Stainless Steel	yes / yes	MSM 19 CS BL red	1241.7026.1121075
19	5 / 3	125 / 250 VAC	Backlighted, green, 24 VDC	Stainless Steel	yes / yes	MSM 19 CS BL green	1241.7026.1122000
19	5 / 3	125 / 250 VAC	Backlighted, blue, 24 VDC	Stainless Steel	yes / yes	MSM 19 CS BL blue	1241.7026.1124000
19	5 / 3	125 / 250 VAC	Backlighted, blue, 24 VDC	Stainless Steel	yes / yes	MSM 19 CS BL blue	1241.7026.1124074
19	10	250 VAC	Backlighted, red, 24 VDC	Stainless Steel	yes / yes	MSM 19 CS BL red	1241.7026.1131000
19	10	250 VAC	Backlighted, green, 24 VDC	Stainless Steel	yes / yes	MSM 19 CS BL green	1241.7026.1132000
19	10	250 VAC	Backlighted, blue, 24 VDC	Stainless Steel	yes / yes	MSM 19 CS BL blue	1241.7026.1134000
19	10	250 VAC	Backlighted, bright blue, 24 VDC	Stainless Steel	yes / yes	MSM 19 CS BL bright blue	3-102-445
19	0.1	30 VDC	Backlighted, multicolor, 24 VDC	Stainless Steel	yes / yes	MSM 19 CS BL multicolor	3-102-788
19	10	250 VAC	Backlighted, multicolor, 24 VDC	Stainless Steel	yes / yes	MSM 19 CS BL multicolor	3-102-790

Legend:
Type:
MSMCS = Ceramic Surface
ST = Standard: not lettered
LE = Lettering: lettered
AI = BL = Full Surface Backlighting: Lettering possible (see Lettering, last 3 digits)

IP65 degree of protection front side contact areadegree of protection rear side contact area IP40 or IP67 optional -> see Technical Data Micro Switch

Customer-specific versions available on request.
Special materials for use in salt and chlorinated environment on request.

The MOQ for standard laser lettering on standard variants is 10 pieces.

5 VDC and 12 VDC variants (except for RGB) on request (MOQ 500 pieces)

The nut with gasket and micro switch are enclosed in the box.

Most Popular.

Availability for all products can be searched real-time:https://www.schurter.com/en/Stock-Check/Stock-Check-SCHURTER

Packaging unit 10 in box with insert

- Actuating elements in ESD safe packaging
- Screw nuts and sealing rings in a bag (enclosd in the box)

Accessories

	Description
	MSM Cover Protection cover for MSM 19 and MSM 22
	Power Supply Power Supply IP42 for LED- and Illumination applications indoor 90~264 VAC => 24 VDC 0.34 A 8 W
	Installation Wrench MSM 22 Installation wrench

11.02.2019

The specifications, descriptions and illustrations indicated in this document are based on current information. All content is subject to modifications and amendments. Information furnished is believed to be accurate and reliable. However, users should independently evaluate the suitability and test each product selected for their own applications.