Device connector, front mounting - M23-17S1N8AA500S - 1628497

Please be informed that the data shown in this PDF Document is generated from our Online Catalog. Please find the complete data in the user's documentation. Our General Terms of Use for Downloads are valid (http://phoenixcontact.com/download)



Device connector for front wall, M23 PRO, angled rotatable, for standard and ONECLICK fast locking system, M23, No. of pos.: 17, type of contact: Socket, Crimp connection, flange dimensions: 26 mm x 26 mm

Your advantages

- Solutions with cross-manufacturer compatibility for standard and fast locking systems
- Modern, consistent design for highly convenient operation

RoHS

Key Commercial Data

Packing unit	1 pc
GTIN	4 055626 622125
GTIN	4055626622125

Technical data

Temperature range

Ambient temperature (operation)	-40 °C ... 125 °C

Data of the insulating body

Note	Order information: Order crimp contacts Ø 1 mm separately
Coding	N
Insulator material	PA 6.6
Contact connection method	Crimp connection
Type of contacts	Socket
Application	Signal
Number of positions	17
Direction of rotation	Standard
Contact diameter of signal contacts	1 mm
Litz wire cross section of signal contacts min.	0.08 mm²
Litz wire cross section of signal contacts max.	1 mm²
Nominal current per signal contact	8 A

Device connector, front mounting - M23-17S1N8AA500S - 1628497

Technical data

Data of the insulating body

Note	for max. connection cross section
Rated voltage of signal contact	125 V
Rated surge voltage	1.5 kV
Overvoltage category	III
Degree of pollution	3
Note	for max. connection cross section

Housing data

Housing material	GD-Zn
Flange dimensions	26 mm x 26 mm
Type of locking	for standard and ONECLICK fast locking system
Degree of protection (when plugged in)	IP66 / IP68 (2 m / 24 h)
Thread type	M23

Environmental Product Compliance

China RoHS	Environmentally Friendly Use Period = 50 years
	For details about hazardous substances go to tab “Downloads”, Category “Manufacturer's declaration”

Drawings

Device connector, front mounting - M23-17S1N8AA500S - 1628497

Schematic diagram

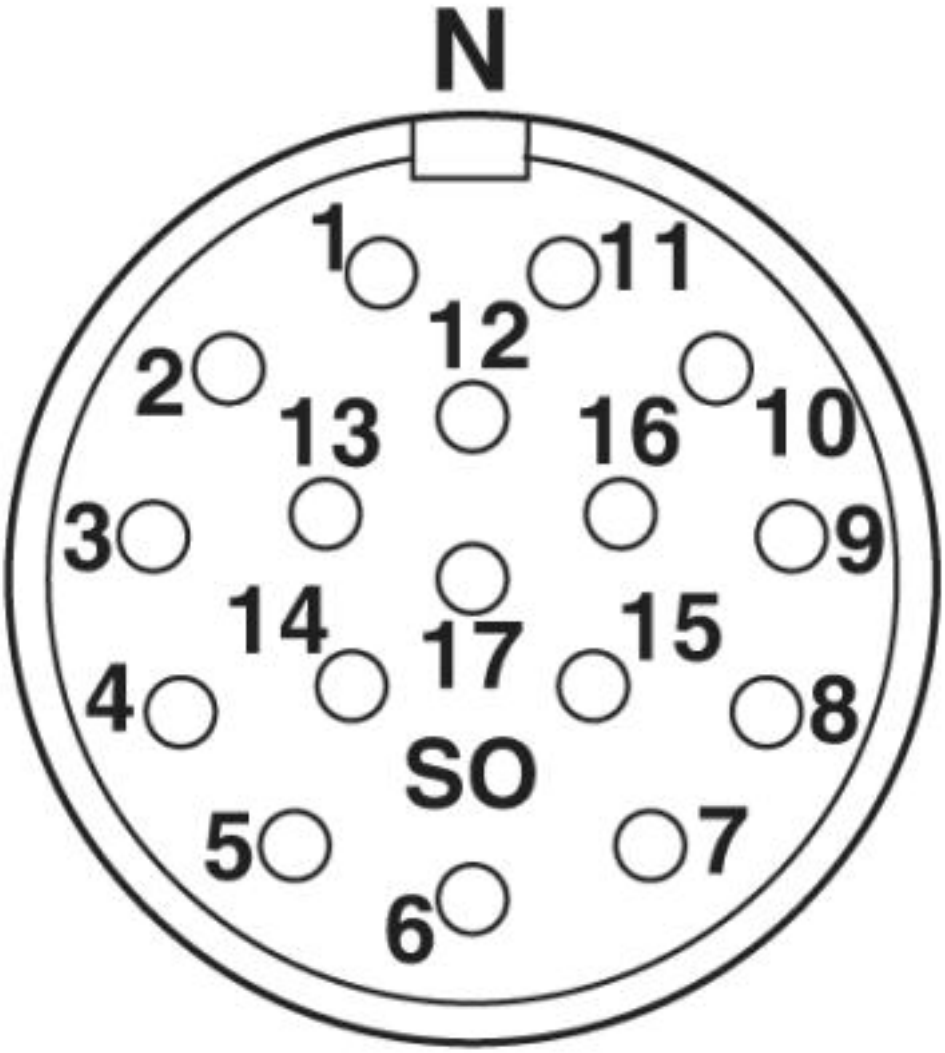

Device connector, front mounting - M23-17S1N8AA500S - 1628497

Dimensional drawing

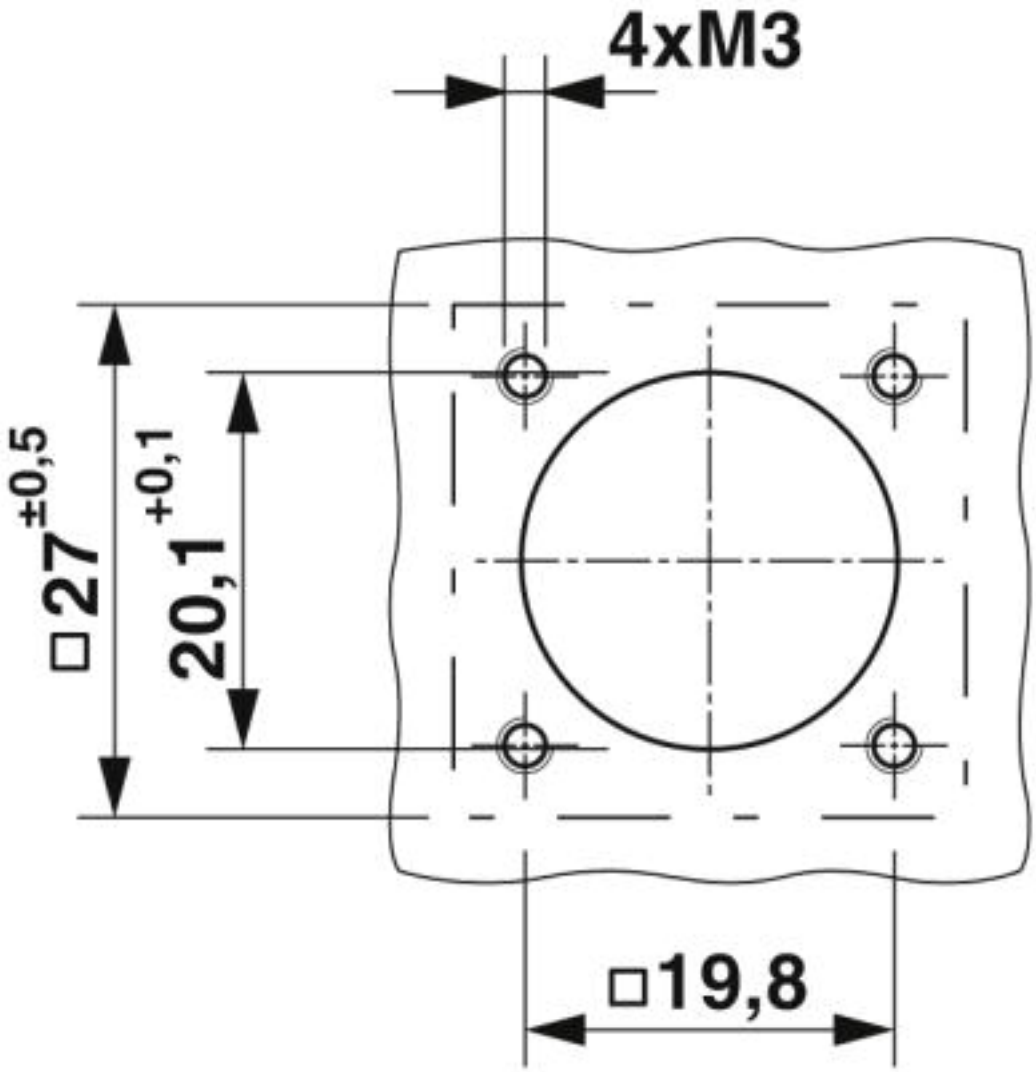

Installation dimensions

Device connector, front mounting - M23-17S1N8AA500S - 1628497

Dimensional drawing

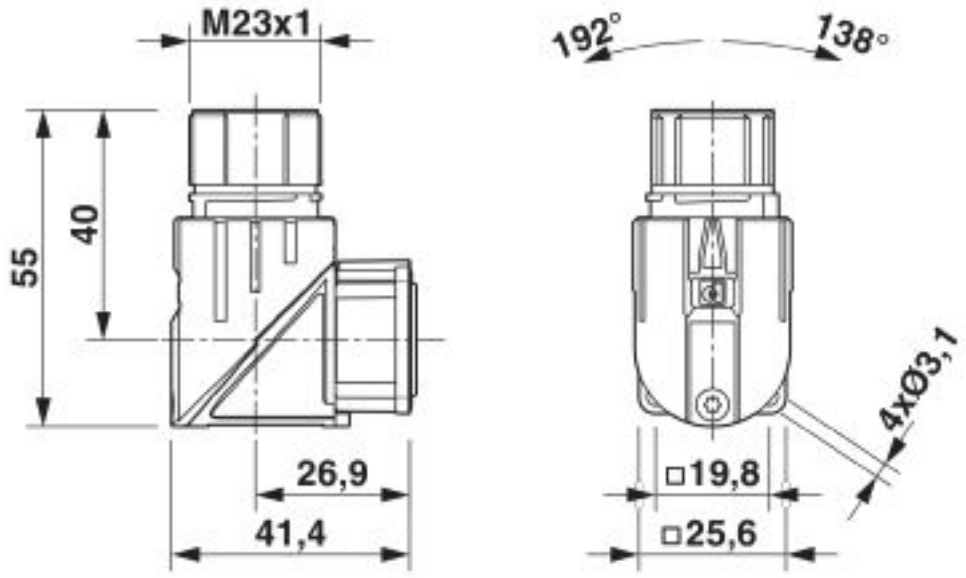

Classifications

eCl@ss

eCl@ss 10.0.1	27440109
eCl@ss 8.0	27440102
eCl@ss 9.0	27440103

ETIM

ETIM 5.0	EC002635
ETIM 6.0	EC002061

Approvals

Approvals

Approvals

UL Recognized / cUL Recognized / cULus Recognized

Ex Approvals

Approval details

Device connector, front mounting - M23-17S1N8AA500S - 1628497

Approvals

UL Recognized		http://database.ul.com/cgi-bin/XYV/template/LISEXT/1FRAME/index.htm E335019-20141210

Nominal voltage UN	150 V
Nominal current IN	4.5 A
mm²/AWG/kcmil	20

cUL Recognized		http://database.ul.com/cgi-bin/XYV/template/LISEXT/1FRAME/index.htm E335019-20141210

Nominal voltage UN	150 V
Nominal current IN	3.5 A
mm²/AWG/kcmil	20

cULus Recognized

Accessories

Accessories

Crimp contact

Crimp contact - RC-12S2000 - 1599600



Crimp contact, turned, Single contact, contact diameter: 1 mm, crimp range: 0.14 mm² ... 0.56 mm²

Crimp contact - RC-11S2000 - 1596772



Crimp contact, turned, Single contact, contact diameter: 1 mm, crimp range: 0.08 mm² ... 0.22 mm²

Device connector, front mounting - M23-17S1N8AA500S - 1628497

Accessories

Crimp contact - RC-1KS2000 - 1602998



Crimp contact, turned, Single contact, contact diameter: 1 mm, crimp range: 0.5 mm² ... 1 mm²

Crimp contact - RC-22S2000 - 1603327



Crimp contact, rolled, Single contact, contact diameter: 1 mm, crimp range: 0.22 mm² ... 0.56 mm²

Crimp contact - RC-22S2300 - 1603330



Crimp contact, rolled, Taped articles, number of pieces per reel: 500, contact diameter: 1 mm, crimp range: 0.22 mm² ... 0.56 mm²

Crimp contact - RC-22S2400 - 1603332



Crimp contact, rolled, number of pieces per reel: 10000, contact diameter: 1 mm, crimp range: 0.22 mm² ... 0.56 mm²

Mounting material

Screw - M23-Z0001 - 1035117



Anchor screw, self-tapping, for M23-PRO series angled device connectors

Protective cover

Device connector, front mounting - M23-17S1N8AA500S - 1628497

Accessories

Protective cap - RC-Z2059 - 1604225



Plastic protection cap for connectors with M23 external thread

Metal protective cap - RC-Z2104 - 1604260



Metal protection cap for signal connectors with M23 external thread

Phoenix Contact 2020 © - all rights reserved
http://www.phoenixcontact.com

PHOENIX CONTACT GmbH & Co. KG
Flachsmarktstr. 8
32825 Blomberg
Germany
Tel. +49 5235 300
Fax +49 5235 3 41200
http://www.phoenixcontact.com