Device connector, rear mounting - CA-1RS1N8AHZ00 - 1624021

Please be informed that the data shown in this PDF Document is generated from our Online Catalog. Please find the complete data in the user's documentation. Our General Terms of Use for Downloads are valid (http://phoenixcontact.com/download)



Device connector for rear wall, CA, straight, shielded: yes, for standard and SPEEDCON interlock, M23, No. of pos.: 16+2+PE, type of contact: Socket, Crimp connection, Axial seal, Central fixing

Your advantages

- Safe use in the field, thanks to high degree of protection
- Connector for flexible on-site assembly
- Consistent EMC protection for reliable transmission of signals
- Crimping connection: vibration- and temperature-resistant assembly
- Application-specific wall mounting optionally with thread or anti-rotation protection and lock nut

RoHS

Key Commercial Data

Packing unit	1 pc
GTIN	4 055626 228358
GTIN	4055626228358

Technical data

Data of the insulating body

Note	Order information: Order crimp contacts 16 x Ø 1 mm, 3 x Ø 1.5 mm separately
Coding	N
Insulator material	PA 6.6
Contact connection method	Crimp connection
Type of contacts	Socket
Application	Signal
Number of positions	19
Direction of rotation	Standard
Contact diameter of power contacts	1.5 mm
Litz wire cross section of power contacts min.	0.08 mm²
Litz wire cross section of power contacts max.	1 mm²

Device connector, rear mounting - CA-1RS1N8AHZ00 - 1624021

Technical data

Data of the insulating body

Rated current for power contacts	10 A
Note	for max. connection cross section
Rated voltage of power contact	150 V
Rated surge voltage	1.5 kV
Overvoltage category	II
Degree of pollution	3
Contact diameter of signal contacts	1 mm
Litz wire cross section of signal contacts min.	0.08 mm²
Litz wire cross section of signal contacts max.	1 mm²
Nominal current per signal contact	8 A
Note	for max. connection cross section
Rated voltage of signal contact	150 V
Rated surge voltage	1.5 kV
Overvoltage category	II
Degree of pollution	3
Note	for max. connection cross section

Housing data

Housing material	Turned parts: copper zinc alloy (CuZn), die-cast parts: zinc (GD-Zn)
Type of locking	for standard and SPEEDCON interlock
Degree of protection (when plugged in)	IP67
Thread type	M23

Environmental Product Compliance

REACh SVHC	Lead 7439-92-1
China RoHS	Environmentally Friendly Use Period = 50 years
	For details about hazardous substances go to tab “Downloads”, Category “Manufacturer's declaration”

Drawings

Device connector, rear mounting - CA-1RS1N8AHZ00 - 1624021

Dimensional drawing

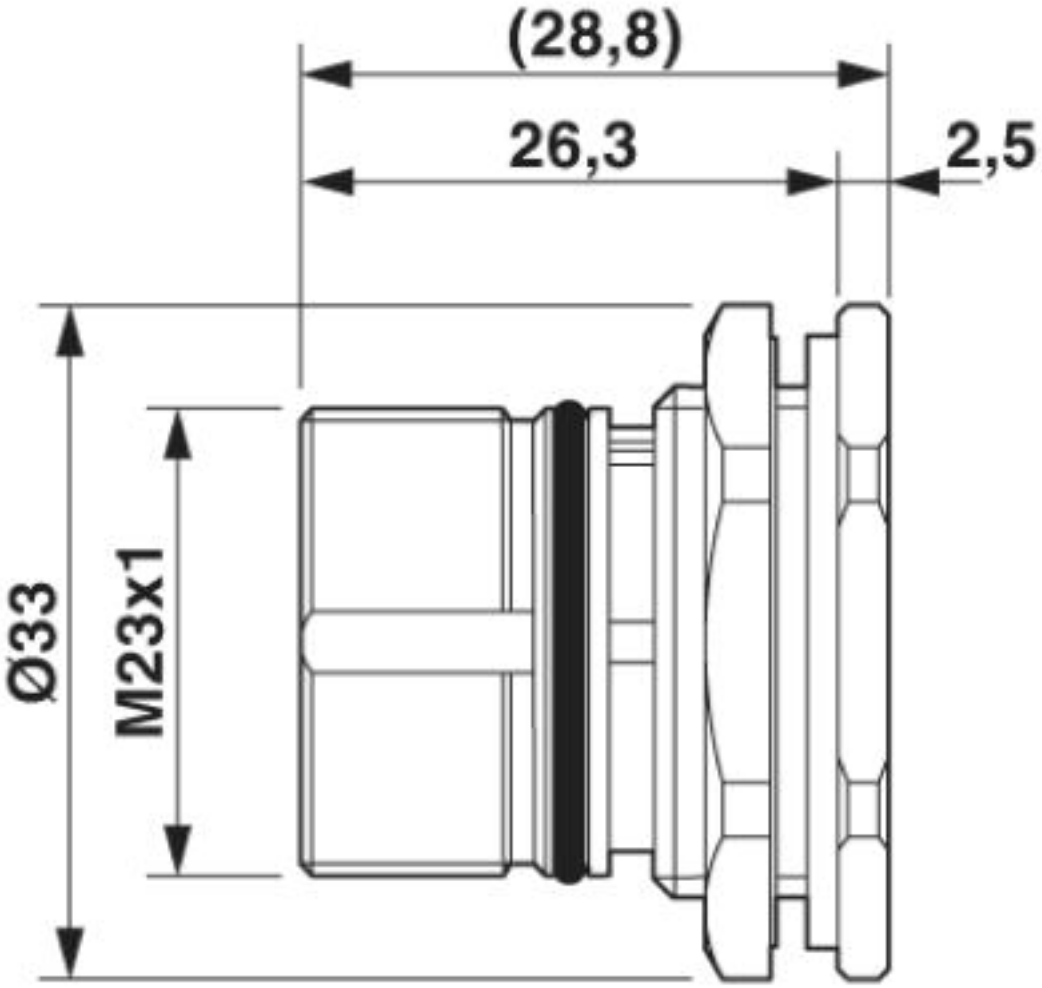

Device connector, rear mounting - CA-1RS1N8AHZ00 - 1624021

Dimensional drawing

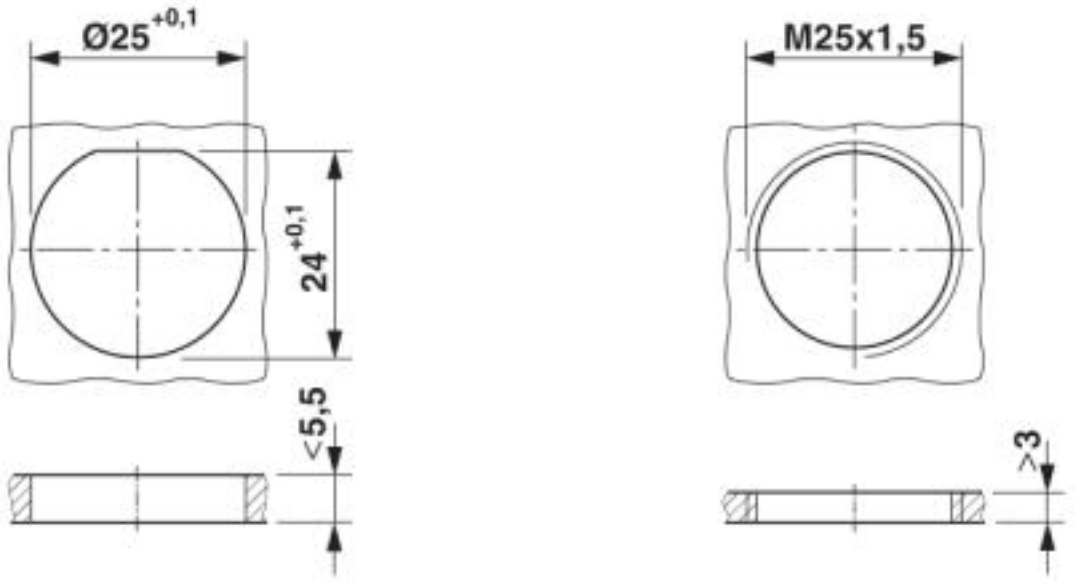

Installation dimensions

Device connector, rear mounting - CA-1RS1N8AHZ00 - 1624021

Schematic diagram

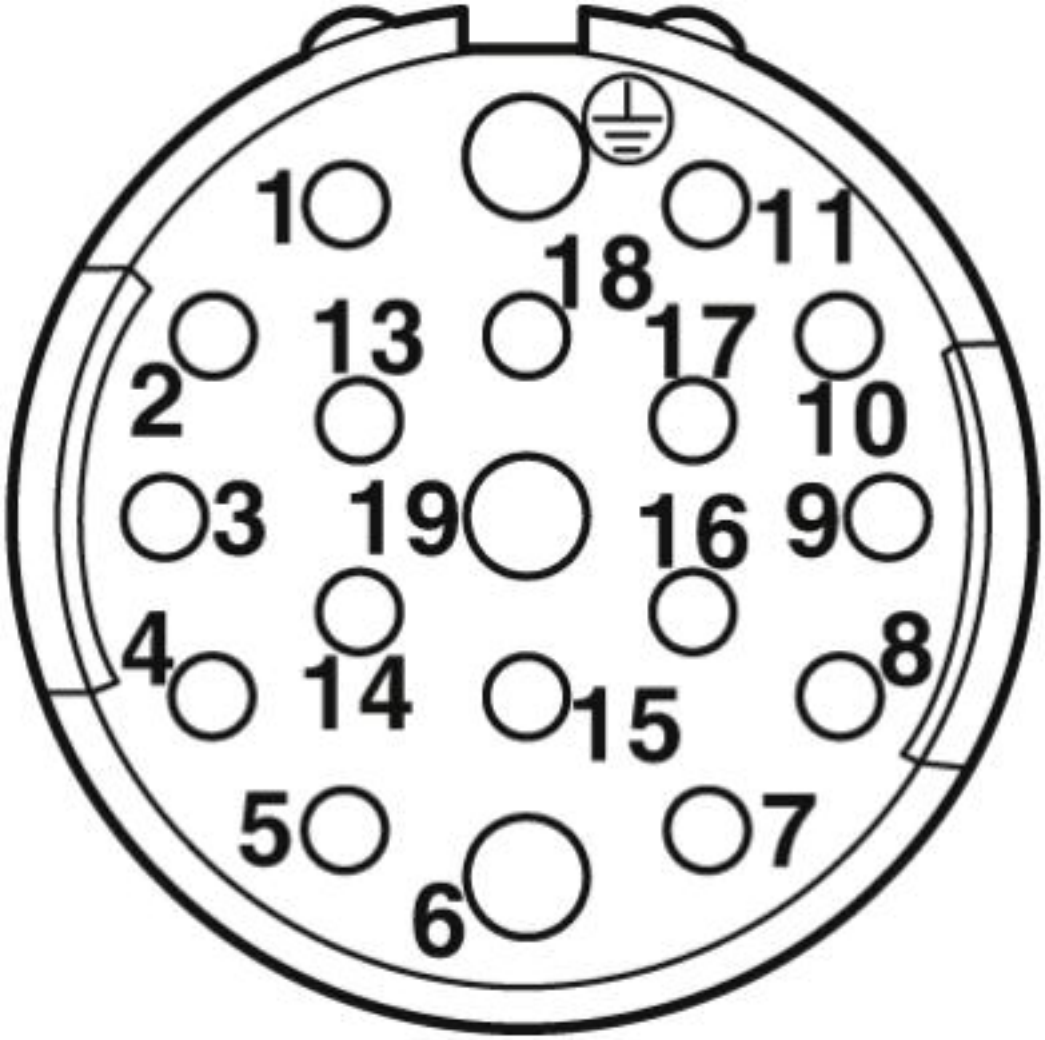

Classifications

eCl@ss

eCl@ss 10.0.1	27440109
eCl@ss 4.0	27260700
eCl@ss 4.1	27260700
eCl@ss 5.0	27260700
eCl@ss 5.1	27260700
eCl@ss 6.0	27260700
eCl@ss 7.0	27440102
eCl@ss 8.0	27440102
eCl@ss 9.0	27440103

Device connector, rear mounting - CA-1RS1N8AHZ00 - 1624021

Classifications

ETIM

ETIM 5.0	EC002635
ETIM 6.0	EC002061

UNSPSC

UNSPSC 13.2	39121413
UNSPSC 18.0	39121413
UNSPSC 19.0	39121413
UNSPSC 20.0	39121413
UNSPSC 21.0	39121413

Approvals

Approvals

Approvals

EAC

Ex Approvals

Approval details

EAC	EAC	B.01687

Accessories

Accessories

Crimp contact

Crimp contact - RC-11S2000 - 1596772



Crimp contact, turned, Single contact, contact diameter: 1 mm, crimp range: 0.08 mm² ... 0.22 mm²

Device connector, rear mounting - CA-1RS1N8AHZ00 - 1624021

Accessories

Crimp contact - RC-12S2000 - 1599600



Crimp contact, turned, Single contact, contact diameter: 1 mm, crimp range: 0.14 mm² ... 0.56 mm²

Crimp contact - RC-1KS2000 - 1602998



Crimp contact, turned, Single contact, contact diameter: 1 mm, crimp range: 0.5 mm² ... 1 mm²

Crimp contact - RC-15S2200 - 1627290



Crimp contact, turned, contact diameter: 1.5 mm, crimp range: 0.08 mm² ... 0.22 mm²

Crimp contact - RC-15S2000 - 1623775



Crimp contact, turned, contact diameter: 1.5 mm, crimp range: 0.5 mm² ... 1 mm²

Mounting material

Contact removal tool - CA-Z0001 - 1620699



Unlocking tool for contact carriers for snapping in the M23 signal device connectors

Device connector, rear mounting - CA-1RS1N8AHZ00 - 1624021

Accessories

Color-coding - CA-Z0110 - 1620700



Color-coding, color: green

Color-coding - CA-Z0111 - 1620701



Color-coding, color: orange

Color-coding - CA-Z0112 - 1620702



Color-coding, color: black

Protective cover

Protective cap - SF-Z0019 - 1607449



Plastic protection cap, with eye, IP40 for connectors with M23 external thread, RF, SF series

Protective cap - RC-Z2059 - 1604225



Plastic protection cap for connectors with M23 external thread

Device connector, rear mounting - CA-1RS1N8AHZ00 - 1624021

Accessories

Plastic anti-static dust protection cap - RC-Z2469 - 1611797



Plastic protection cap, antistatic, for RF, SF, CA, RC series connectors, with M23 external thread

Metal protective cap - RC-Z2104 - 1604260



Metal protection cap for signal connectors with M23 external thread

Metal protective cap - RC-Z2068 - 1604236



Metal protection cap with steel wire for signal connectors with M23 external thread

Phoenix Contact 2020 © - all rights reserved
http://www.phoenixcontact.com

PHOENIX CONTACT GmbH & Co. KG
Flachsmarktstr. 8
32825 Blomberg
Germany
Tel. +49 5235 300
Fax +49 5235 3 41200
http://www.phoenixcontact.com