Coupler connector - CA-1RP1N8A9007 - 1624012

Please be informed that the data shown in this PDF Document is generated from our Online Catalog. Please find the complete data in the user's documentation. Our General Terms of Use for Downloads are valid (http://phoenixcontact.com/download)



Similar to figure, please order crimp contacts separately

Coupling connector, CA, straight, shielded: yes, for standard and SPEEDCON interlock, M23, No. of pos.: 16+2+PE, type of contact: Pin, Crimp connection, cable diameter range: 6 mm ... 10 mm

Your advantages

- Safe use in the field, thanks to high degree of protection
- Connector for flexible on-site assembly
- Consistent EMC protection for reliable transmission of signals
- Crimping connection: vibration- and temperature-resistant assembly

RoHS

Key Commercial Data

Packing unit	1 pc
GTIN	4 055626 227856
GTIN	4055626227856

Technical data

Data of the insulating body

Note	Order information: Order crimp contacts 16 x Ø 1 mm, 2 x Ø 1.5 mm, 1 x Ø 1.5 (PE, first) separately
Coding	N
Insulator material	PA 6.6
Contact connection method	Crimp connection
Type of contacts	Pin
Application	Signal
Number of positions	19
Direction of rotation	Standard
Contact diameter of power contacts	1.5 mm
Litz wire cross section of power contacts min.	0.08 mm²

Coupler connector - CA-1RP1N8A9007 - 1624012

Technical data

Data of the insulating body

Litz wire cross section of power contacts max.	1 mm²
Rated current for power contacts	10 A
Note	for max. connection cross section
Rated voltage of power contact	150 V
Rated surge voltage	1.5 kV
Overvoltage category	II
Degree of pollution	3
Contact diameter of signal contacts	1 mm
Litz wire cross section of signal contacts min.	0.08 mm²
Litz wire cross section of signal contacts max.	1 mm²
Nominal current per signal contact	8 A
Rated voltage of signal contact	150 V
Rated surge voltage	1.5 kV
Overvoltage category	II
Degree of pollution	3

Housing data

Housing material	Turned parts: copper zinc alloy (CuZn), die-cast parts: zinc (GD-Zn)
Type of locking	for standard and SPEEDCON interlock
Degree of protection (when plugged in)	IP67
Thread type	M23

Cable seal data

Cable diameter	6 mm ... 10 mm
Sealing material	NBR

Environmental Product Compliance

REACh SVHC	Lead 7439-92-1
China RoHS	Environmentally Friendly Use Period = 50 years
	For details about hazardous substances go to tab “Downloads”, Category “Manufacturer's declaration”

Drawings

Coupler connector - CA-1RP1N8A9007 - 1624012

Dimensional drawing

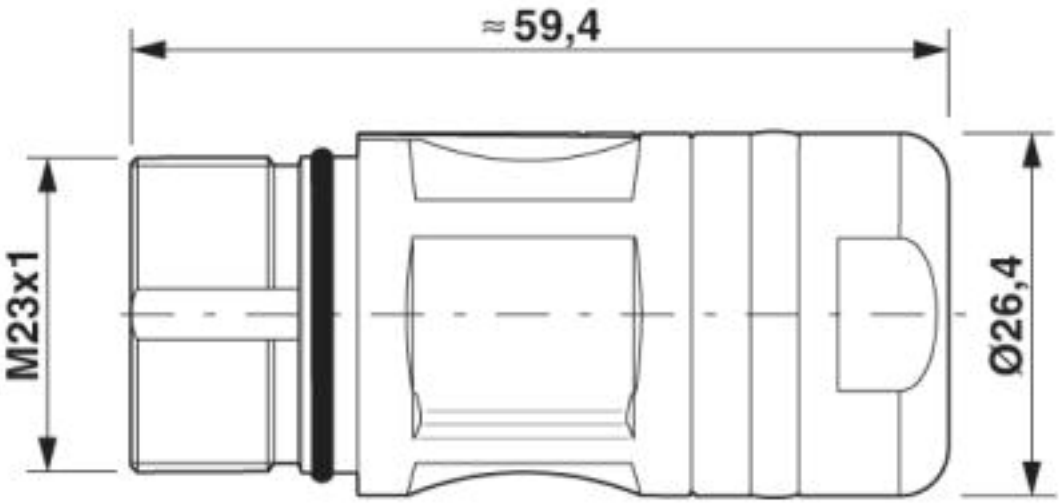

Coupler connector - CA-1RP1N8A9007 - 1624012

Schematic diagram

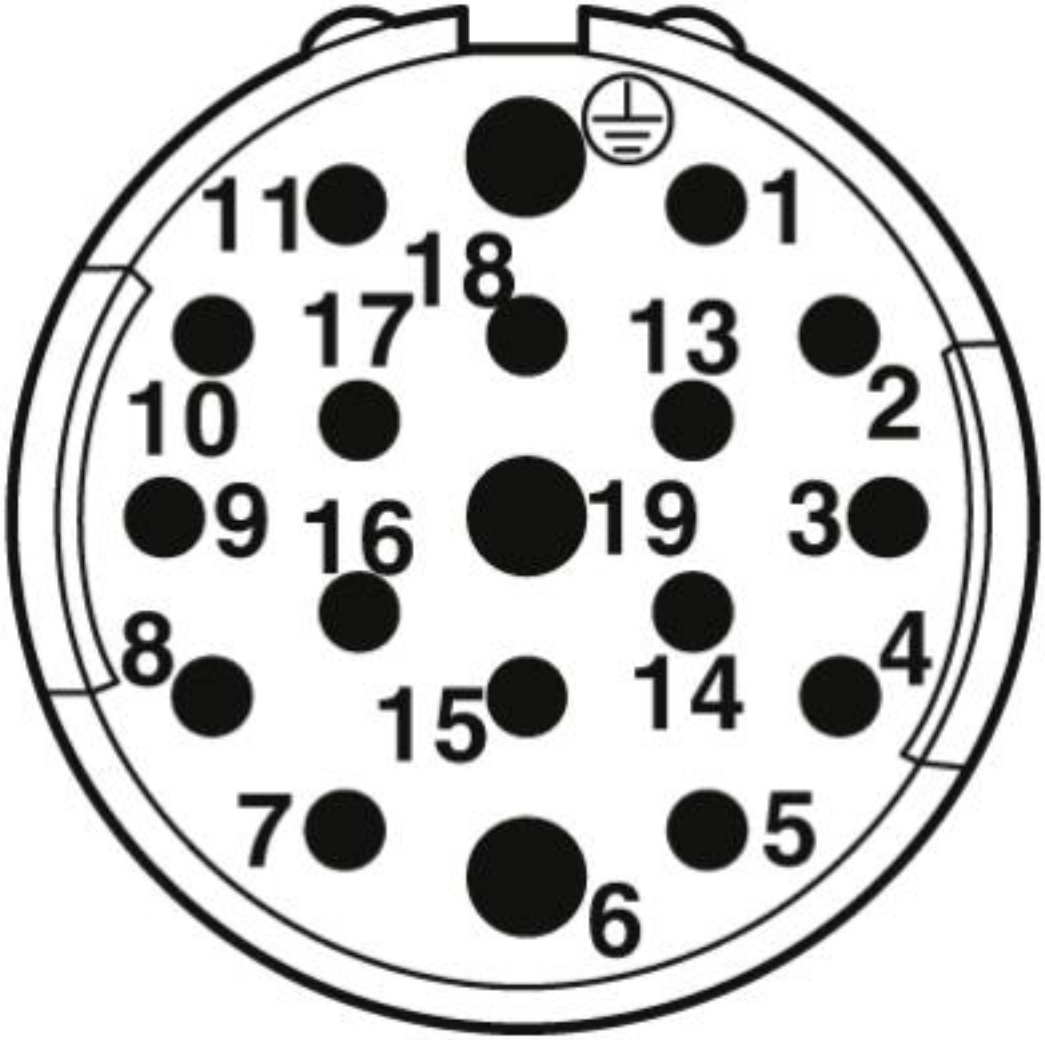

Classifications

eCl@ss

eCl@ss 10.0.1	27440102
eCl@ss 4.0	27260700
eCl@ss 4.1	27260700
eCl@ss 5.0	27260700
eCl@ss 5.1	27260700
eCl@ss 6.0	27260700
eCl@ss 7.0	27440102
eCl@ss 8.0	27440102
eCl@ss 9.0	27440102

Coupler connector - CA-1RP1N8A9007 - 1624012

Classifications

ETIM

ETIM 5.0	EC002635
ETIM 6.0	EC002061

UNSPSC

UNSPSC 13.2	39121413
UNSPSC 18.0	39121413
UNSPSC 19.0	39121413
UNSPSC 20.0	39121413
UNSPSC 21.0	39121413

Approvals

Approvals

Approvals

UL Recognized / cUL Recognized / EAC / cULus Recognized

Ex Approvals

Approval details

UL Recognized http://database.ul.com/cgi-bin/XYV/template/LISEXT/1FRAME/index.htm E335019-20141210

Nominal voltage UN	150 V
Nominal current IN	8 A
mm²/AWG/kcmil	18

cUL Recognized http://database.ul.com/cgi-bin/XYV/template/LISEXT/1FRAME/index.htm E335019-20141210

Nominal voltage UN	150 V
Nominal current IN	5 A
mm²/AWG/kcmil	18

EAC B.01687

Coupler connector - CA-1RP1N8A9007 - 1624012

Approvals

cULus Recognized

Accessories

Accessories

Crimp contact

Crimp contact - RC-15P2010 - 1623776



Crimp contact, turned, contact diameter: 1 mm, crimp range: 0.08 mm² ... 0.22 mm²

Crimp contact - RC-15P2020 - 1623777



Crimp contact, turned, contact diameter: 1 mm, crimp range: 0.14 mm² ... 0.56 mm²

Crimp contact - RC-15P2030 - 1623778



Crimp contact, turned, contact diameter: 1 mm, crimp range: 0.5 mm² ... 1 mm²

Crimp contact - RC-15P2200 - 1627292



Crimp contact, turned, contact diameter: 1.5 mm, crimp range: 0.08 mm² ... 0.22 mm²

Coupler connector - CA-1RP1N8A9007 - 1624012

Accessories

Crimp contact - RC-15P2300 - 1627291



Crimp contact, turned, contact diameter: 1.5 mm, crimp range: 0.14 mm² ... 0.56 mm²

Crimp contact - RC-15P2000 - 1623779



Crimp contact, turned, contact diameter: 1.5 mm, crimp range: 0.5 mm² ... 1 mm²

Crimp contact - RC-15P2100 - 1623780



Crimp contact, leading (PE), turned, contact diameter: 1.5 mm, crimp range: 0.5 mm² ... 1 mm²

Mounting material

Color-coding - RF-Z0016 - 1620593



Color-coding, color: black

Color-coding - RF-Z0014 - 1620588



Color-coding, color: green

Coupler connector - CA-1RP1N8A9007 - 1624012

Accessories

Color-coding - RF-Z0015 - 1620592



Color-coding, color: orange

Square mounting flange - RF-Z0003 - 1607905



Square mounting flange, Axial seal, 4xM3, flange dimensions: 35 mm x 35 mm

Special wrench - RF-Z0007 - 1614347



Special wrench

Protective cover

Protective cap - SF-Z0019 - 1607449



Plastic protection cap, with eye, IP40 for connectors with M23 external thread, RF, SF series

Protective cap - RC-Z2059 - 1604225



Plastic protection cap for connectors with M23 external thread

Coupler connector - CA-1RP1N8A9007 - 1624012

Accessories

Plastic anti-static dust protection cap - RC-Z2469 - 1611797



Plastic protection cap, antistatic, for RF, SF, CA, RC series connectors, with M23 external thread

Metal protective cap - RC-Z2104 - 1604260



Metal protection cap for signal connectors with M23 external thread

Metal protective cap - RC-Z2068 - 1604236



Metal protection cap with steel wire for signal connectors with M23 external thread

Phoenix Contact 2020 © - all rights reserved
http://www.phoenixcontact.com

PHOENIX CONTACT GmbH & Co. KG
Flachsmarktstr. 8
32825 Blomberg
Germany
Tel. +49 5235 300
Fax +49 5235 3 41200
http://www.phoenixcontact.com