Device connector, front mounting - ST-8EP1N8AA500S - 1620454

Please be informed that the data shown in this PDF Document is generated from our Online Catalog. Please find the complete data in the user's documentation. Our General Terms of Use for Downloads are valid (http://phoenixcontact.com/download)



The figure shows the 8-pos. version with sockets

Device connector, front mounting, angled rotatable, for standard and SPEEDCON interlock, M17, number of positions: 5+3+PE, type of contact: Pin, Crimp connection, Axial O-ring, 4x Ø 3.2, shielded: yes, flange dimensions: 25.75 mm x 25.75 mm

Your advantages

- Easy connection, thanks to infinitely adjustable cable outlet direction up to 310°
- Consistent EMC protection for reliable connection solutions in the industrial environment
- Crimping connection: vibration- and temperature-resistant assembly

Key Commercial Data

Packing unit	1 pc
GTIN	4 046356 828444
GTIN	4046356828444

Technical data

General

Note	Order information: Order crimp contacts 5 x 0.6 mm, 4 x Ø 1 mm separately
Type of locking	for standard and SPEEDCON interlock
Direction of rotation of contact chamber numbering	Standard
Coding	N
Contact connection method	Crimp connection
Type of contacts	Pin
Number of positions	9
Contact diameter of power contacts	1 mm
Rated current for power contacts	14 A
Contact diameter of signal contacts	0.6 mm
Nominal current per signal contact	3.6 A

Device connector, front mounting - ST-8EP1N8AA500S - 1620454

Technical data

General

Pg housing screw connection	none
Mounting type	4x Ø 3.2

Ambient conditions

Ambient temperature	-40 °C ... 125 °C
Degree of protection	IP67

Specifications according to DIN EN 61984:2001

Installation height max.	2000 m
Nominal / operating voltage of power contacts	630 V
Rated surge voltage of power contacts	6 kV
Overvoltage category of power contacts	III
Degree of pollution of power contacts	3
Nominal / operating voltage of signal contacts	60 V
Rated surge voltage of signal contacts	1.5 kV
Overvoltage category of signal contacts	III
Degree of pollution of signal contacts	3

Standards and Regulations

Safety note	WARNING: The connectors may not be plugged in or disconnected under load. Ignoring the warning or improper use may damage persons and/or property.
	• WARNING: Commission properly functioning products only. The products must be regularly inspected for damage. Decommission defective products immediately. Replace damaged products. Repairs are not possible.
	• WARNING: Only electrically qualified personnel may install and operate the product. They must observe the following safety notes. The qualified personnel must be familiar with the basics of electrical engineering. They must be able to recognize and prevent danger. The relevant symbol on the packaging indicates that only personnel familiar with electrical engineering are allowed to install and operate the product.
	• The products are suitable for applications in plant, controller, and electrical device engineering.
	• When operating the connectors in outdoor applications, they must be separately protected against environmental influences.
	• Assembled products may not be manipulated or improperly opened.
	• Only use mating connectors that are specified in the technical data of the standards listed (e.g. the ones listed in the product accessories online at phoenixcontact.com/products).
	• When using the product in direct connection with third-party manufacturers, the user is responsible.
	• For operating voltages > 50 V AC, conductive connector housings must be grounded
	• Ensure that the protective or functional ground has been properly connected.
	• VDE 0100/1.97 § 411.1.3.2 and DIN EN 60 204/11.98 § 14.1.3 are applicable when combining several circuits in a cable and/or connector

Device connector, front mounting - ST-8EP1N8AA500S - 1620454

Technical data

Standards and Regulations

	• Only use tools recommended by Phoenix Contact
	• The installation notes/Design In documents online on the download page at phoenixcontact.com/products must be observed for this product.
	• Operate the connector only when it is fully plugged in and interlocked.
	• Ensure that when laying the cable, the tensile load on the connectors does not exceed the upper limit specified in the standards.
	• Observe the minimum bending radius of the cable. Lay the cable without twisting it.
	• The connector warms up in normal operation. Depending on the ambient conditions, the surface of the connector can continue to warm up. In this case, the user is responsible for posting warnings (e.g. DIN EN ISO 13732-1:2008-12).

Environmental Product Compliance

REACh SVHC	Lead 7439-92-1
China RoHS	Environmentally Friendly Use Period = 50 years
	For details about hazardous substances go to tab “Downloads”, Category “Manufacturer's declaration”

Drawings

Device connector, front mounting - ST-8EP1N8AA500S - 1620454

Schematic diagram

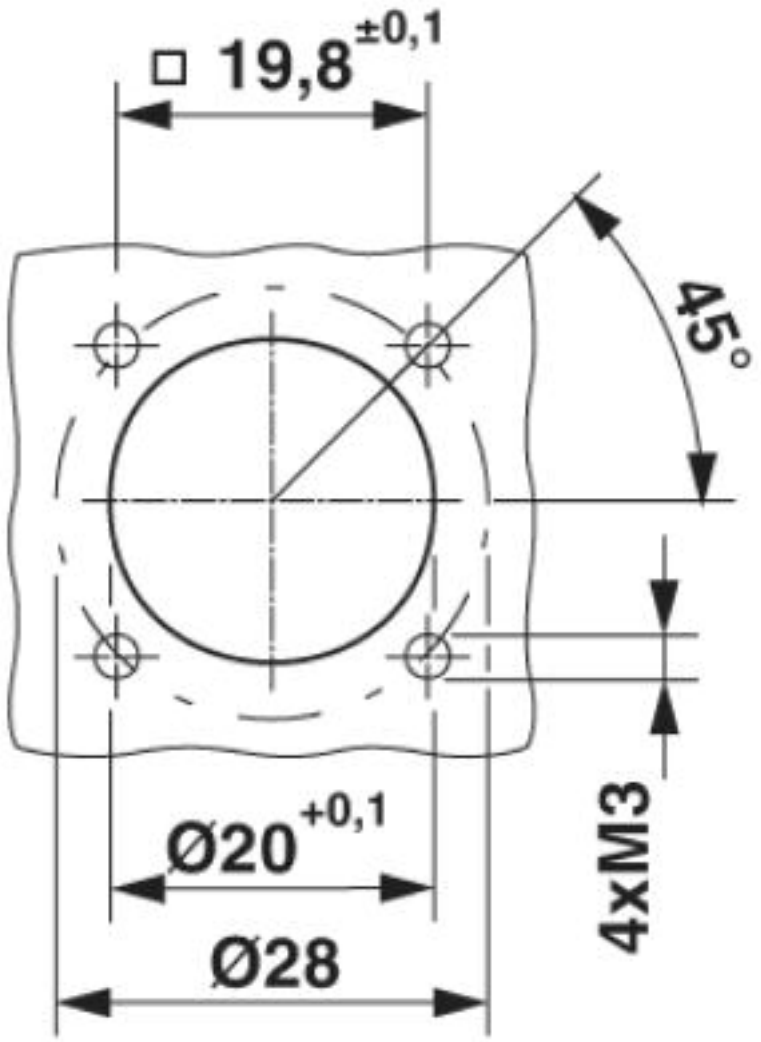

Installation dimensions

Device connector, front mounting - ST-8EP1N8AA500S - 1620454

Schematic diagram

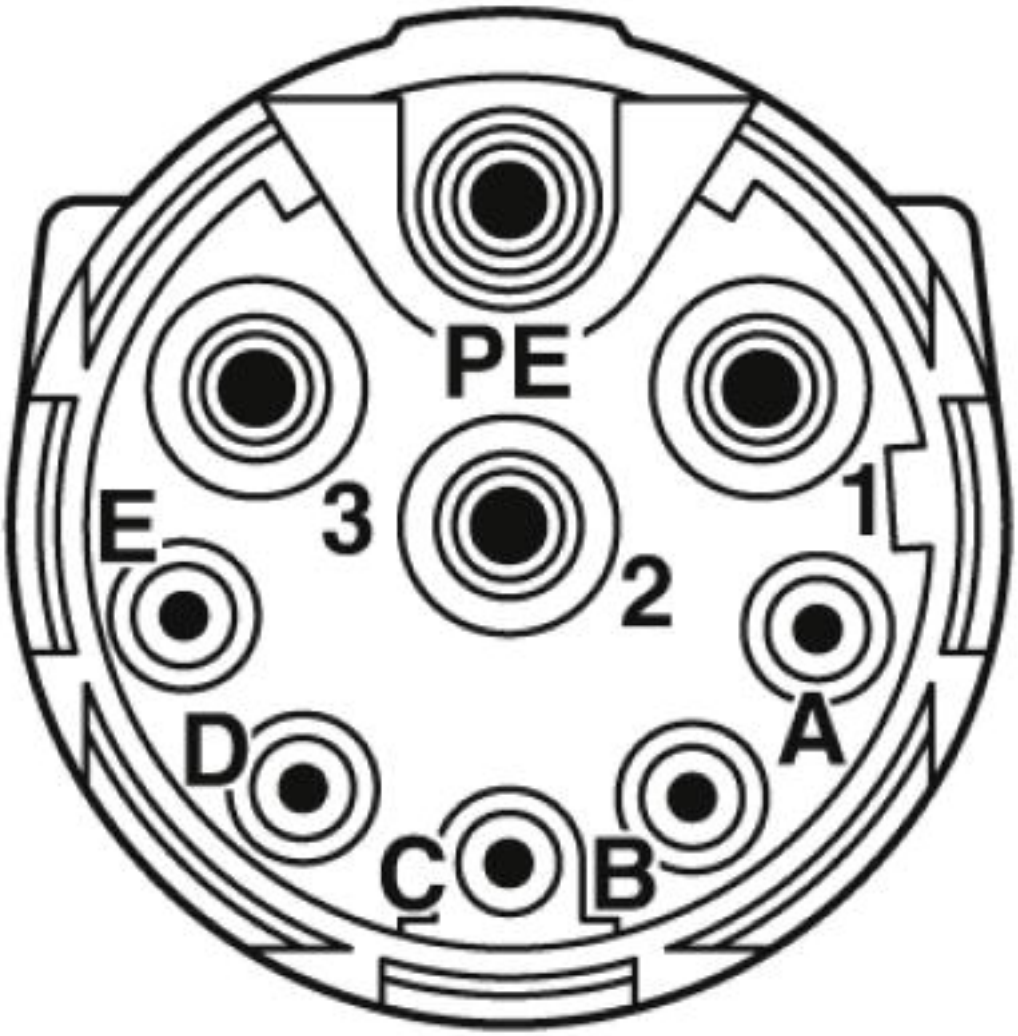

Connector pin assignment

Device connector, front mounting - ST-8EP1N8AA500S - 1620454

Dimensional drawing

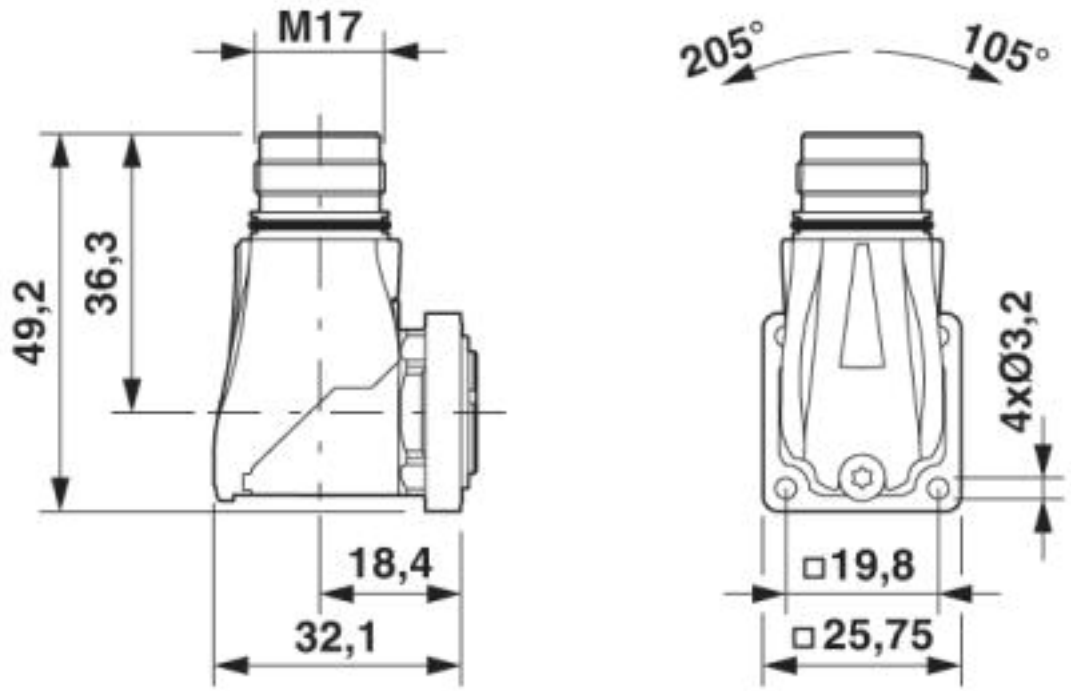

Dimensional drawing

Classifications

eCl@ss

eCl@ss 10.0.1	27440102
eCl@ss 4.0	27140800
eCl@ss 4.1	27140800
eCl@ss 5.0	27143400
eCl@ss 5.1	27143400
eCl@ss 6.0	27279200
eCl@ss 7.0	27440103
eCl@ss 8.0	27440103
eCl@ss 9.0	27440102

ETIM

ETIM 3.0	EC001121
ETIM 4.0	EC002635
ETIM 5.0	EC002061
ETIM 6.0	EC002061

UNSPSC

UNSPSC 6.01	43172015
UNSPSC 7.0901	43201404

Device connector, front mounting - ST-8EP1N8AA500S - 1620454

Classifications

UNSPSC

UNSPSC 11	43172015
UNSPSC 12.01	43201404
UNSPSC 13.2	39121413
UNSPSC 18.0	39121413
UNSPSC 19.0	39121413
UNSPSC 20.0	39121413
UNSPSC 21.0	39121413

Approvals

Approvals

Approvals

UL Recognized / cUL Recognized / EAC / cULus Recognized

Ex Approvals

Approval details

UL Recognized		http://database.ul.com/cgi-bin/XYV/template/LISEXT/1FRAME/index.htm	FILE E 335019

Nominal voltage UN	600 V
Nominal current IN	3.5 A
mm²/AWG/kcmil	20

cUL Recognized		http://database.ul.com/cgi-bin/XYV/template/LISEXT/1FRAME/index.htm	FILE E 335019

Nominal voltage UN	600 V
Nominal current IN	3.5 A
mm²/AWG/kcmil	20

EAC		B.01687

Device connector, front mounting - ST-8EP1N8AA500S - 1620454

Approvals

cULus Recognized

Accessories

Accessories

Crimp contact

Crimp contact - ST-06KP010 - 1607577



Crimp contact, turned, contact diameter: 0.6 mm, crimp range: 0.06 mm² ... 0.25 mm²

Crimp contact - ST-06KP020 - 1607578



Crimp contact, turned, contact diameter: 0.6 mm, crimp range: 0.14 mm² ... 0.34 mm²

Crimp contact - ST-06KP030 - 1607579



Crimp contact, turned, contact diameter: 0.6 mm, crimp range: 0.34 mm² ... 0.5 mm²

Crimp contact - ST-10KP010 - 1618255



Crimp contact, turned, Single contact, contact diameter: 1 mm, crimp range: 0.06 mm² ... 0.25 mm²

Device connector, front mounting - ST-8EP1N8AA500S - 1620454

Accessories

Crimp contact - ST-10KP035 - 1618458



Crimp contact, turned, contact diameter: 1 mm, crimp range: 0.25 mm² ... 1 mm²

Mounting material

Color-coding - ST-Z0019 - 1620621



Color-coding, color: green

Color-coding - ST-Z0020 - 1620622



Color-coding, color: orange

Color-coding - ST-Z0021 - 1620623



Color-coding, color: black

Protective cover

Protective cap - ST-Z0006 - 1607776



Plastic protection cap for connectors with M17 external thread

Device connector, front mounting - ST-8EP1N8AA500S - 1620454

Accessories

Metal protective cap - ST-Z0014 - 1616069



Metal protection cap for connectors with M17 external thread

Metal protective cap - ST-Z0013 - 1616068



Metal protection cap with steel wire for connectors with M17 external thread

Phoenix Contact 2020 © - all rights reserved
http://www.phoenixcontact.com

PHOENIX CONTACT GmbH & Co. KG
Flachsmarktstr. 8
32825 Blomberg
Germany
Tel. +49 5235 300
Fax +49 5235 3 41200
http://www.phoenixcontact.com