Panel mounting base - RC-0000000WQ00 - 1593021

Please be informed that the data shown in this PDF Document is generated from our Online Catalog. Please find the complete data in the user's documentation. Our General Terms of Use for Downloads are valid (http://phoenixcontact.com/download)



Panel mounting base, series: RC, straight, Screw locking, M23, Radial O-ring, 4x Ø2,7, shielded: yes, panel thickness min.: 3 mm

RoHS IP67

Key Commercial Data

Packing unit	40 pc
Minimum order quantity	40 pc
GTIN	4 046356 193832
GTIN	4046356193832

Technical data

General

Type of locking	Screw locking
Pg housing screw connection	none
Mounting type	4x Ø2,7

Ambient conditions

Ambient temperature	-20 °C ... 125 °C
Degree of protection	IP67

Material

Housing material	Turned parts: copper zinc alloy (CuZn), die-cast parts: zinc (GD-Zn)
Gasket and O-ring material	FPM

Specifications according to DIN EN 61984:2001

Installation height max.	2000 m

Environmental Product Compliance

China RoHS	Environmentally friendly use period: unlimited = EFUP-e
	No hazardous substances above threshold values

Panel mounting base - RC-0000000WQ00 - 1593021

Drawings

Diagram

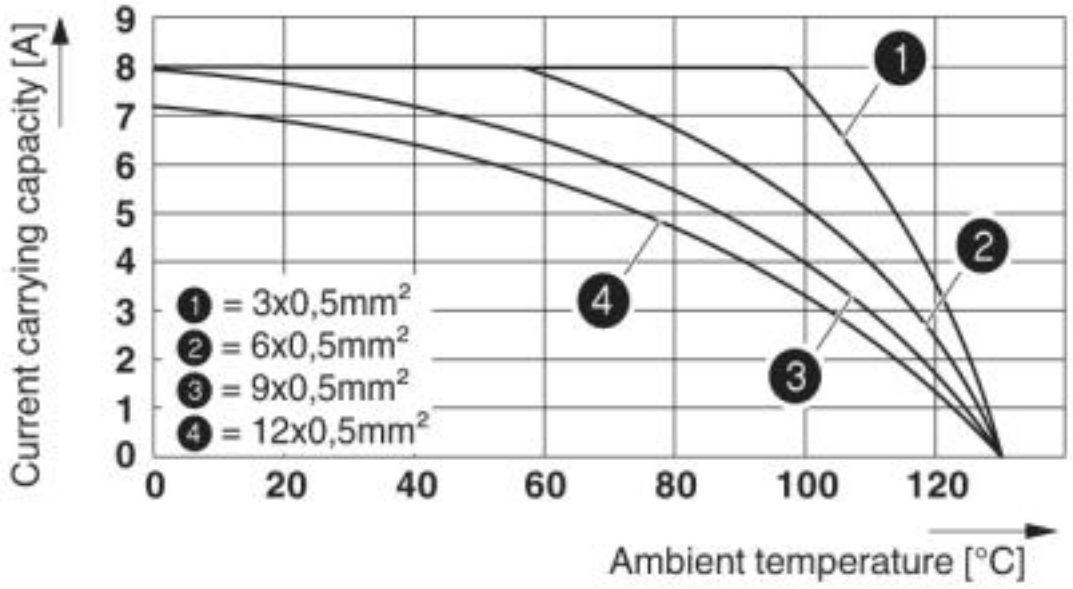

Diagram

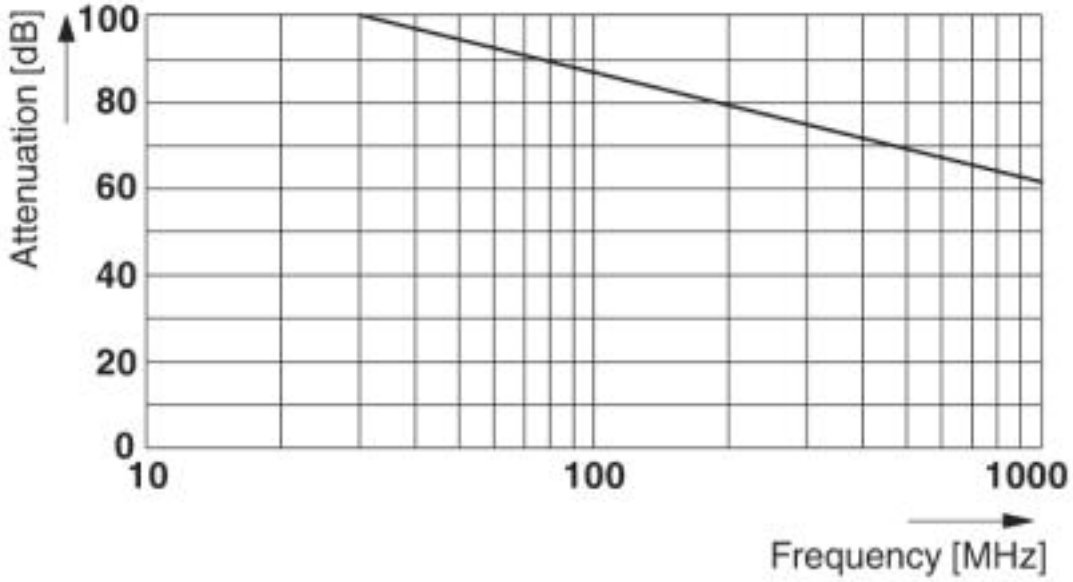

Panel mounting base - RC-0000000WQ00 - 1593021

Dimensional drawing

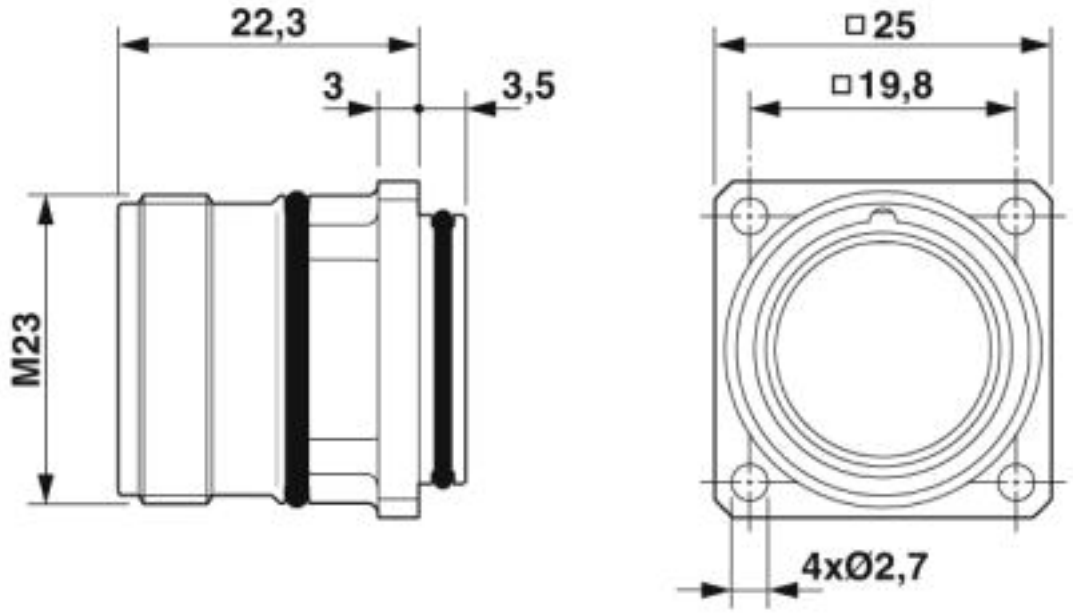

Panel mounting base - RC-0000000WQ00 - 1593021

Dimensional drawing

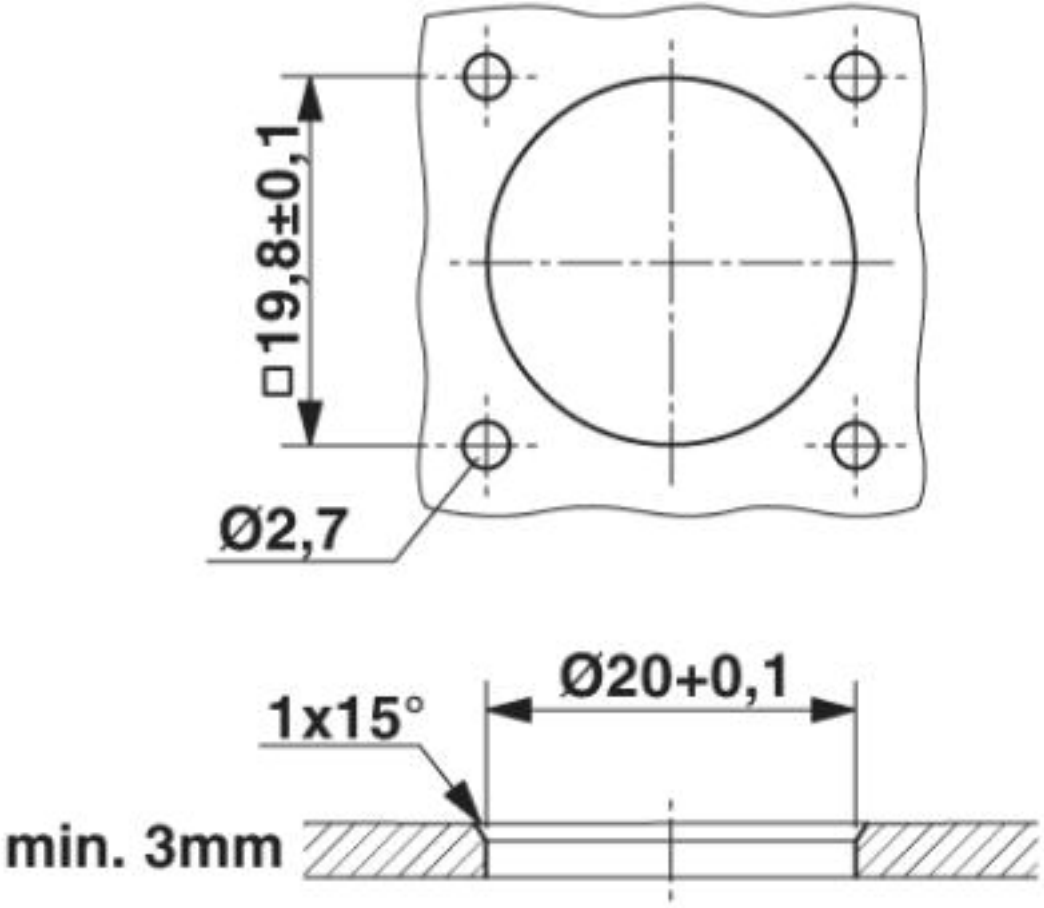

Installation dimensions
Flat gasket, radial O-ring

Classifications

eCl@ss

eCl@ss 10.0.1	27440202
eCl@ss 4.0	27260700
eCl@ss 4.1	27260700
eCl@ss 5.0	27260700
eCl@ss 5.1	27261200
eCl@ss 6.0	27261200
eCl@ss 7.0	27440202
eCl@ss 8.0	27440202
eCl@ss 9.0	27440202

ETIM

ETIM 3.0	EC001121

Panel mounting base - RC-0000000WQ00 - 1593021

Classifications

ETIM

ETIM 4.0	EC001121
ETIM 5.0	EC000437
ETIM 6.0	EC000437
ETIM 7.0	EC000437

UNSPSC

UNSPSC 6.01	43172015
UNSPSC 7.0901	43201404
UNSPSC 11	43172015
UNSPSC 12.01	43201404
UNSPSC 13.2	31261501
UNSPSC 18.0	31261501
UNSPSC 19.0	31261501
UNSPSC 20.0	31261501
UNSPSC 21.0	31261501

Approvals

Approvals

Approvals

EAC

Ex Approvals

Approval details

EAC	EAC	B.01742

Phoenix Contact 2020 © - all rights reserved
http://www.phoenixcontact.com

PHOENIX CONTACT GmbH & Co. KG
Flachsmarktstr. 8
32825 Blomberg
Germany
Tel. +49 5235 300
Fax +49 5235 3 41200
http://www.phoenixcontact.com