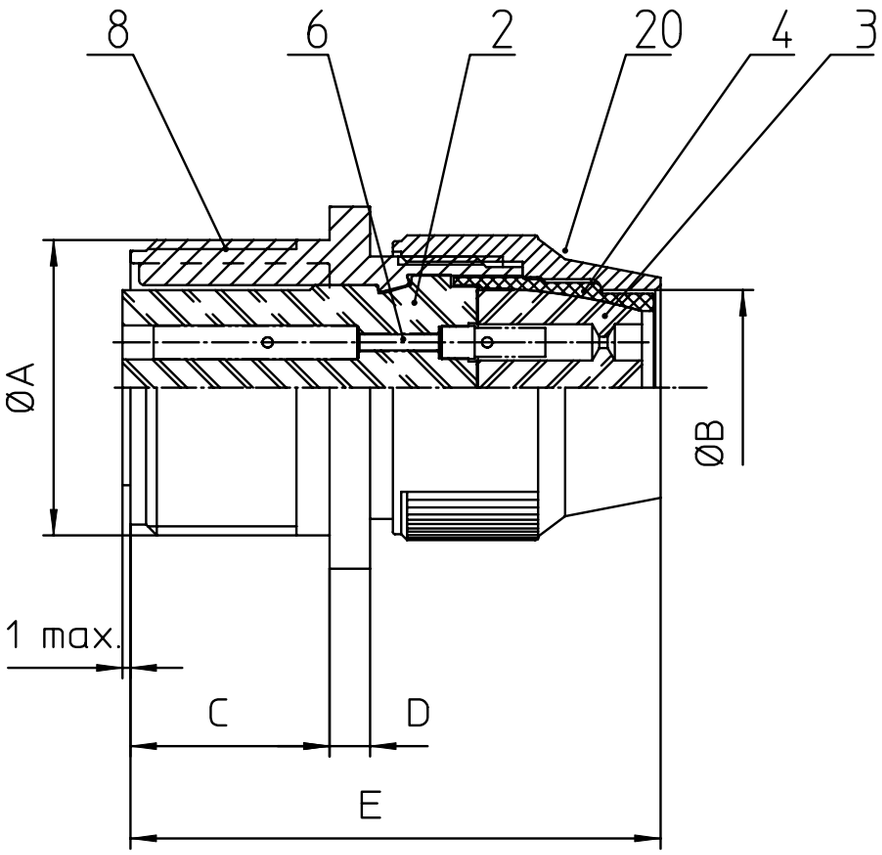

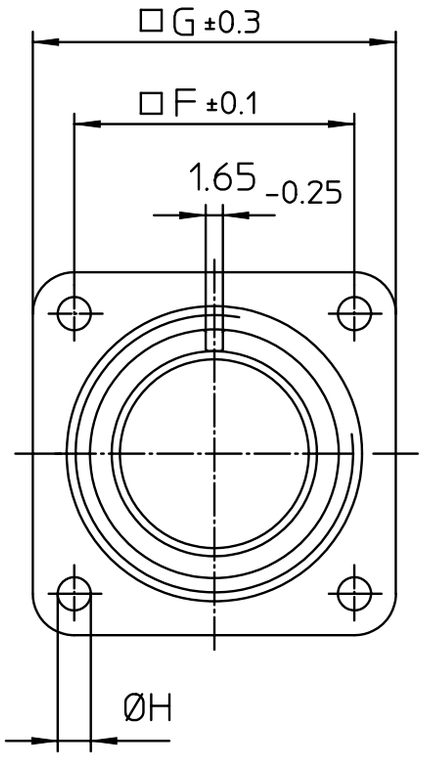

NO.	MASSE / DIMENSIO
A	1 3/4-18NS-2A
B	31.6
C	20.6
D	2.4
E	53
F	39.7
G	50.8
H	3.7

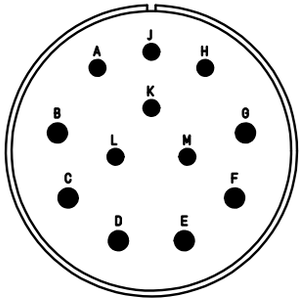

NO.	BESCHREIBUNG / DESCRIPTION
2	ISOLIERKÖRPER BUCHSE / INSULATOR SOCKET
3	DICHTKÖRPER / GROMMET
4	ENDRING / ENDRING
6	KONTAKTBUCHSE / CONTACT SOCKET
8	DOSENGEHÄUSE / SHELL
20	KURZES ENDGEHÄUSE/SHORT ENDBELL

Note: Due to an automatic nomenclature system, numbers generated may not be sequential.

Specification and Dimensions subject to chang
Drawings illustrate normal insulator positioning

Material Specification:	
Shell Material:	Aluminium alloy
Shell Plating:	Olive drab chromate coating over cadmium plating
Insulator Material:	Neoprene
Contact Material:	Copper alloy
Contact Plating:	Hard silver

all dimensions are in mm
Dimensions without tolerance indications are general tolerances in acc. with DIN7168m

drawing for
CUSTOMER

ITT
Engineered for life
ITT CANNON GmbH
D - 71384 Weinstadt/Germany

description MS3100R28-9S
Wall mounting receptacle
Shortened light-weight endbell without cable clamp
Solder Cup / Socket / Layout: 28-9

© All rights reserved. Reproduction or issue to third in any form whatever is only permitted with written authorization of ITT Cannon

page 1/1

revision 969 9. Apr 20