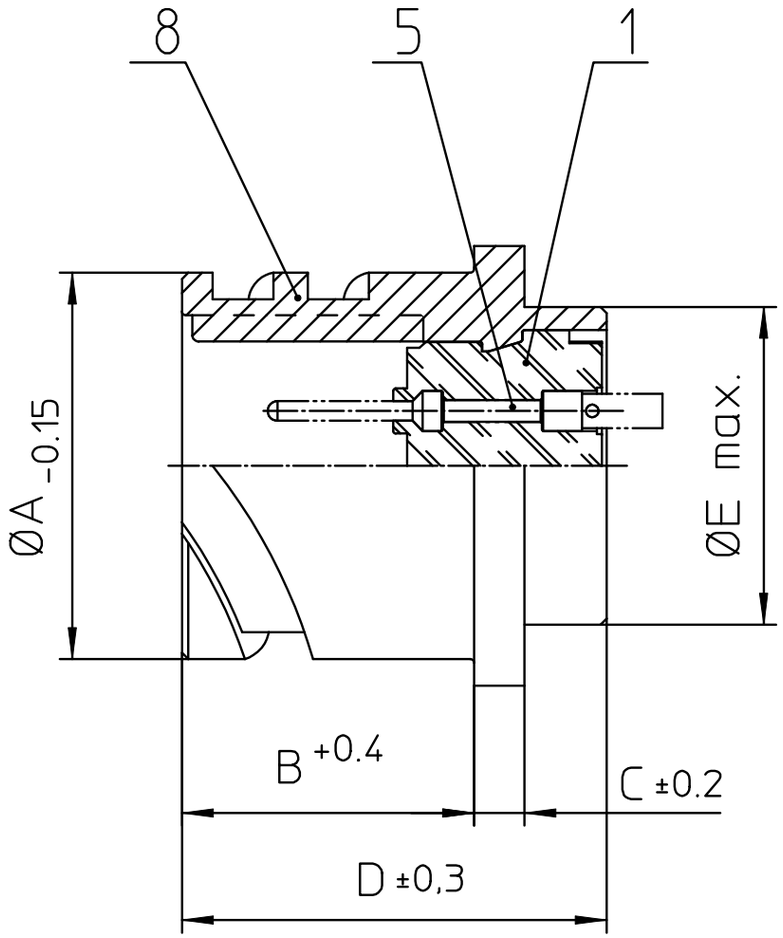

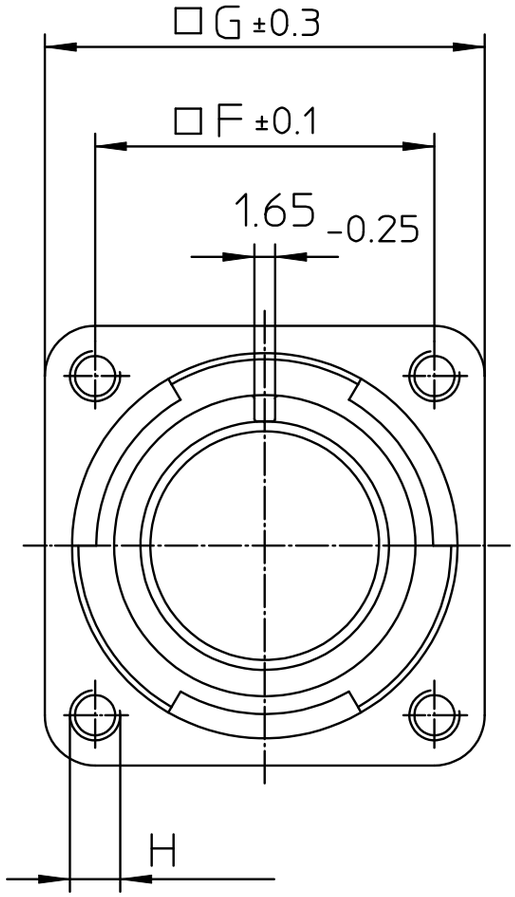

NO.	MASSE / DIMENSION
A	24.6
B	18.2
C	3.2
D	24.7
E	19.2
F	23
G	30
H	M4

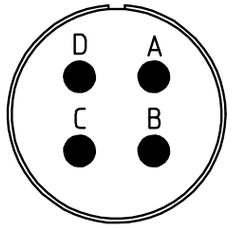

NO.	BESCHREIBUNG / DESCRIPTION
1	ISOLIERKÖRPER STIFT / INSULATOR PIN
5	KONTAKTSTIFT/ CONTACT PIN
8	DOSENGEHÄUSE / SHELL

Note: Due to an automatic nomenclature system, numbers generated may not be sequential.

Specification and Dimensions subject to chang
Drawings illustrate normal insulator positioning

Material Specification:	
Shell Material:	Aluminium alloy
Shell Plating:	Olive drab chromate over cadmium (conductive)
Insulator Material:	CR-Elastomere
Contact Material:	Copper alloy
Contact Plating:	Hard silver

all dimensions are in mm
Dimensions without tolerance indications are general tolerances in acc. with DIN7168m

drawing for
CUSTOMER

ITT
Engineered for life
ITT CANNON GmbH
D - 71384 Weinstadt/Germany

description CA3102E14S-2P-B-109
Box mounting receptacle (rear mount, threaded holes)

AWG Crimp / Pin / Layout: 14S-2

© All rights reserved, Reproduction or issue to third in any form whatever is only permitted with written authorization of ITT Cannon

page 1/1

revision 1840 30. Apr 20