# ESP8266EX
# Datasheet

Version 5.6

Copyright © 2017

# About This Guide

This document introduces the specifications of ESP8266EX, including the following topics.

| Chapter | Title | Subject |
|---|---|---|
| Chapter 1 | Overview | Provides an overview of ESP8266, including its features, protocols, technical parameters and applications. |
| Chapter 2 | Pin Definitions | Provides the pin layout and the relevant description. |
| Chapter 3 | Functional Description | Describes major functional modules integrated on ESP8266EX including CPU, flash and memory, clock, radio, Wi-Fi, and low-power management. |
| Chapter 4 | Peripheral Interface | Provides descriptions of peripheral interfaces integrated on ESP8266EX. |
| Chapter 5 | Electrical Specifications | Lists the electrical data of ESP8266EX. |
| Chapter 6 | Package Information | Illustrates the package details for ESP8266EX. |
| Appendix I | Pin List | Provides detailed pin information, including digital die pin list, buffer sheet, register list, and strapping pin list. |
| Appendix II | Learning Resources | Provides a list of ESP8266-related must-read documents and must-have resources. |

## Release Notes

| Date | Version | Release Notes |
|---|---|---|
| 2015.12 | V4.6 | Updated Chapter 3. |
| 2016.02 | V4.7 | Updated Section 3.6 and Section 4.1. |
| 2016.04 | V4.8 | Updated Chapter 1. |
| 2016.08 | V4.9 | Updated Chapter 1. |
| 2016.11 | V5.0 | Added Appendix II “Learning Resources”. |
| 2016.11 | V5.1 | Changed the power consumption during Deep-sleep from 10 μA to 20 μA in Table 5-2. |
| 2016.11 | V5.2 | Changed the crystal frequency range from “26 MHz to 52 MHz” to “24 MHz to 52 MHz” in Section 3.3. |
| 2016.12 | V5.3 | Changed the minimum working voltage from 3.0V to 2.5V. |
| 2017.04 | V5.4 | Changed chip input and output impedance from 50Ω to 39+j6 Ω. |
| 2017.10 | V5.5 | Updated Chapter 3 regarding the range of clock amplitude to 0.8 - 1.5V. |
| 2017.11 | V5.6 | Updated VDDPST from 1.8V ~ 3.3V to 1.8V ~ 3.6V. |

## Documentation Change Notification

**Espressif provides email notifications to keep customers updated on changes to technical documentation. Please subscribe *here*.**

## Certificates

**Download certificates for Espressif products from *here*.**

# Table of Contents


1. Overview ..... 1
   1.1. Wi-Fi Protocols ..... 1
   1.2. Main Technical Specifications ..... 3
   1.3. Applications ..... 4

2. Pin Definitions ..... 5

3. Functional Description ..... 7
   3.1. CPU, Memory, and Flash ..... 7
      3.1.1. CPU ..... 7
      3.1.2. Memory ..... 7
      3.1.3. External Flash ..... 8
   3.2. AHB and AHB Blocks ..... 8
   3.3. Clock ..... 8
      3.3.1. High Frequency Clock ..... 8
      3.3.2. External Clock Requirements ..... 9
   3.4. Radio ..... 9
      3.4.1. Channel Frequencies ..... 9
      3.4.2. 2.4 GHz Receiver ..... 10
      3.4.3. 2.4 GHz Transmitter ..... 10
      3.4.4. Clock Generator ..... 10
   3.5. Wi-Fi ..... 11
   3.6. Power Management ..... 11

4. Peripheral Interface ..... 13
   4.1. General Purpose Input/Output Interface (GPIO) ..... 13
   4.2. Secure Digital Input/Output Interface (SDIO) ..... 13
   4.3. Serial Peripheral Interface (SPI/HSPI) ..... 14
      4.3.1. General SPI (Master/Slave) ..... 14
      4.3.2. HSPI (Slave) ..... 14
   4.4. I2C Interface ..... 14
   4.5. I2S Interface ..... 15
   4.6. Universal Asynchronous Receiver Transmitter (UART) ..... 15
   4.7. Pulse-Width Modulation (PWM) ..... 16
   4.8. IR Remote Control ..... 16
   4.9. ADC (Analog-to-Digital Converter) ..... 17
   4.10. LED Light and Button ..... 18

5. Electrical Specifications .....19
5.1. Electrical Characteristics .....19
5.2. Power Consumption .....19
5.3. Wi-Fi Radio Characteristics .....20
6. Package Information .....21
I. Appendix - Pin List .....22
II. Appendix - Learning Resources .....23
II.1. Must-Read Documents .....23
II.2. Must-Have Resources .....23

# 1. Overview

Espressif's ESP8266EX delivers highly integrated Wi-Fi SoC solution to meet users' continuous demands for efficient power usage, compact design and reliable performance in the Internet of Things industry.

With the complete and self-contained Wi-Fi networking capabilities, ESP8266EX can perform either as a standalone application or as the slave to a host MCU. When ESP8266EX hosts the application, it promptly boots up from the flash. The integrated high-speed cache helps to increase the system performance and optimize the system memory. Also, ESP8266EX can be applied to any micro-controller design as a Wi-Fi adaptor through SPI / SDIO or I2C / UART interfaces.

ESP8266EX integrates antenna switches, RF balun, power amplifier, low noise receive amplifier, filters and power management modules. The compact design minimizes the PCB size and requires minimal external circuitries.

Besides the Wi-Fi functionalities, ESP8266EX also integrates an enhanced version of Tensilica's L106 Diamond series 32-bit processor and on-chip SRAM. It can be interfaced with external sensors and other devices through the GPIOs. Software Development Kit (SDK) provides sample codes for various applications.

Espressif Systems' Smart Connectivity Platform (ESCP) enables sophisticated features including fast switch between sleep and wakeup mode for energy-efficient purpose, adaptive radio biasing for low-power operation, advance signal processing, spur cancellation and radio co-existence mechanisms for common cellular, Bluetooth, DDR, LVDS, LCD interference mitigation.

## 1.1. Wi-Fi Protocols

- 802.11 b/g/n/e/i support.
- Wi-Fi Direct (P2P) support.
- P2P Discovery, P2P GO (Group Owner) mode, GC(Group Client) mode and P2P Power Management.
- Infrastructure BSS Station mode / P2P mode / SoftAP mode support.
- Hardware accelerators for CCMP (CBC-MAC, counter mode), TKIP (MIC, RC4), WAPI (SMS4), WEP (RC4), CRC.
- WPA/WPA2 PSK, and WPS driver.
- Additional 802.11i security features such as pre-authentication, and TSN.
- Open Interface for various upper layer authentication schemes over EAP such as TLS, PEAP, LEAP, SIM, AKA, or customer specific.
- 802.11n support (2.4 GHz).
- Supports MIMO 1×1 and 2×1, STBC, A-MPDU and A-MSDU frame aggregation and 0.4μs guard interval.

- WMM power low U-APSD.
- Multiple queue management to fully utilize traffic prioritization defined by 802.11e standard.
- UMA compliant and certified.
- 802.1h/RFC1042 frame encapsulation.
- Scattered DMA for optimal CPU off load on Zero Copy data transfer operations.
- Antenna diversity and selection (software managed hardware).
- Clock/power gating combined with 802.11-compliant power management dynamically adapted to current connection condition providing minimal power consumption.
- Adaptive rate fallback algorithm sets the optimum transmission rate and Tx power based on actual SNR and packet loss information.
- Automatic retransmission and response on MAC to avoid packet discarding on slow host environment.
- Seamless roaming support.
- Configurable packet traffic arbitration (PTA) with dedicated slave processor based design provides flexible and exact timing Bluetooth co-existence support for a wide range of Bluetooth Chip vendors.
- Dual and single antenna Bluetooth co-existence support with optional simultaneous receive (Wi-Fi/Bluetooth) capability.

## 1.2. Main Technical Specifications

**Table 1-1. Main Technical Specifications**

| Categories | Items | Parameters |
|---|---|---|
| Wi-Fi | Standards | FCC/CE/TELEC/SRRC |
| | Protocols | 802.11 b/g/n/e/i |
| | Frequency Range | 2.4G ~ 2.5G (2400M ~ 2483.5M) |
| | Tx Power | 802.11 b: +20 dBm |
| | | 802.11 g: +17 dBm |
| | | 802.11 n: +14 dBm |
| | Rx Sensitivity | 802.11 b: -91 dbm (11 Mbps) |
| | | 802.11 g: -75 dbm (54 Mbps) |
| | | 802.11 n: -72 dbm (MCS7) |
| | Antenna | PCB Trace, External, IPEX Connector, Ceramic Chip |
| Hardware | CPU | Tensilica L106 32-bit micro controller |
| | Peripheral Interface | UART/SDIO/SPI/I2C/I2S/IR Remote Control |
| | | GPIO/ADC/PWM/LED Light & Button |
| | Operating Voltage | 2.5V ~ 3.6V |
| | Operating Current | Average value: 80 mA |
| | Operating Temperature Range | -40°C ~ 125°C |
| | Storage Temperature Range | -40°C ~ 125°C |
| | Package Size | QFN32-pin (5 mm x 5 mm) |
| | External Interface | - |
| Software | Wi-Fi Mode | Station/SoftAP/SoftAP+Station |
| | Security | WPA/WPA2 |
| | Encryption | WEP/TKIP/AES |
| | Firmware Upgrade | UART Download / OTA (via network) |
| | Software Development | Supports Cloud Server Development / Firmware and SDK for fast on-chip programming |
| | Network Protocols | IPv4, TCP/UDP/HTTP/FTP |
| | User Configuration | AT Instruction Set, Cloud Server, Android/iOS App |

## 1.3. Applications

- Home Appliances
- Home Automation
- Smart Plugs and Lights
- Mesh Network
- Industrial Wireless Control
- Baby Monitors
- IP Cameras
- Sensor Networks
- Wearable Electronics
- Wi-Fi Location-aware Devices
- Security ID Tags
- Wi-Fi Position System Beacons

# 2. Pin Definitions

Figure 2-1 shows the pin layout for 32-pin QFN package.

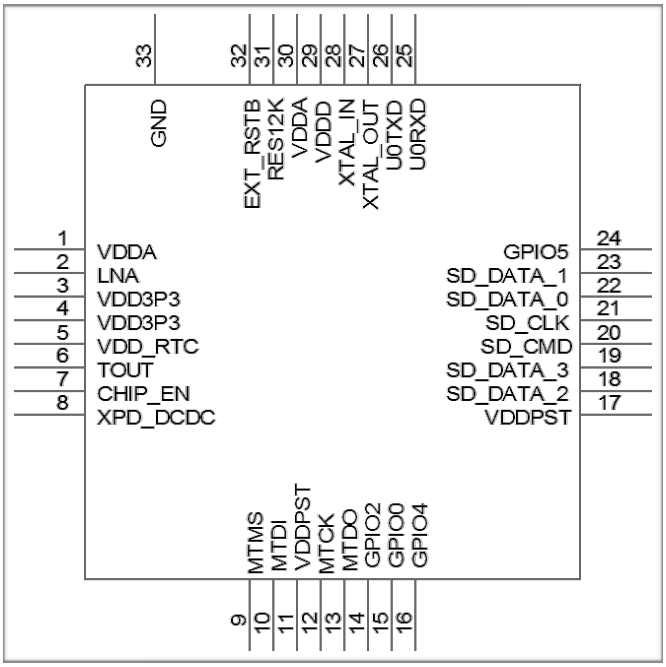


**Figure 2-1. Pin Layout**

Table 2-1 lists the definitions and functions of each pin.

**Table 2-1. ESP8266EX Pin Definitions**

| Pin | Name | Type | Function |
|---|---|---|---|
| 1 | VDDA | P | Analog Power 2.5V ~ 3.6V |
| 2 | LNA | I/O | RF antenna interface<br>Chip output impedance=39+j6 Ω. It is suggested to retain the π-type matching network to match the antenna. |
| 3 | VDD3P3 | P | Amplifier Power 2.5V ~ 3.6V |
| 4 | VDD3P3 | P | Amplifier Power 2.5V ~ 3.6V |
| 5 | VDD_RTC | P | NC (1.1V) |
| 6 | TOUT | I | ADC pin. It can be used to test the power-supply voltage of VDD3P3 (Pin3 and Pin4) and the input power voltage of TOUT (Pin 6). However, these two functions cannot be used simultaneously. |
| 7 | CHIP_PU | I | Chip Enable<br>High: On, chip works properly<br>Low: Off, small current consumed |

| Pin | Name | Type | Function |
|---|---|---|---|
| 8 | XPD_DCDC | I/O | Deep-sleep wakeup (need to be connected to EXT_RSTB); GPIO16 |
| 9 | MTMS | I/O | GPIO 14; HSPI_CLK |
| 10 | MTDI | I/O | GPIO 12; HSPI_MISO |
| 11 | VDDPST | P | Digital/IO Power Supply (1.8V ~ 3.6V) |
| 12 | MTCK | I/O | GPIO 13; HSPI_MOSI; UART0_CTS |
| 13 | MTDO | I/O | GPIO 15; HSPI_CS; UART0_RTS |
| 14 | GPIO2 | I/O | UART Tx during flash programming; GPIO2 |
| 15 | GPIO0 | I/O | GPIO0; SPI_CS2 |
| 16 | GPIO4 | I/O | GPIO 4 |
| 17 | VDDPST | P | Digital/IO Power Supply (1.8V ~ 3.6V) |
| 18 | SDIO_DATA_2 | I/O | Connect to SD_D2 (Series R: 200Ω); SPIHD; HSPIHD; GPIO 9 |
| 19 | SDIO_DATA_3 | I/O | Connect to SD_D3 (Series R: 200Ω); SPIWP; HSPIWP; GPIO 10 |
| 20 | SDIO_CMD | I/O | Connect to SD_CMD (Series R: 200Ω); SPI_CS0; GPIO 11 |
| 21 | SDIO_CLK | I/O | Connect to SD_CLK (Series R: 200Ω); SPI_CLK; GPIO 6 |
| 22 | SDIO_DATA_0 | I/O | Connect to SD_D0 (Series R: 200Ω); SPI_MSIO; GPIO 7 |
| 23 | SDIO_DATA_1 | I/O | Connect to SD_D1 (Series R: 200Ω); SPI_MOSI; GPIO 8 |
| 24 | GPIO5 | I/O | GPIO 5 |
| 25 | U0RXD | I/O | UART Rx during flash programming; GPIO 3 |
| 26 | U0TXD | I/O | UART Tx during flash progamming; GPIO 1; SPI_CS1 |
| 27 | XTAL_OUT | I/O | Connect to crystal oscillator output, can be used to provide BT clock input |
| 28 | XTAL_IN | I/O | Connect to crystal oscillator input |
| 29 | VDDD | P | Analog Power 2.5V ~ 3.6V |
| 30 | VDDA | P | Analog Power 2.5V ~ 3.6V |
| 31 | RES12K | I | Serial connection with a 12 kΩ resistor and connect to the ground |
| 32 | EXT_RSTB | I | External reset signal (Low voltage level: Active) |

📖 ***Note:***

*GPIO2, GPIO0, and MTDO are configurable on PCB as the 3-bit strapping register that determines the booting mode and the SDIO timing mode.*

# 3. Functional Description

The functional diagram of ESP8266EX is shown as in Figure 3-1.

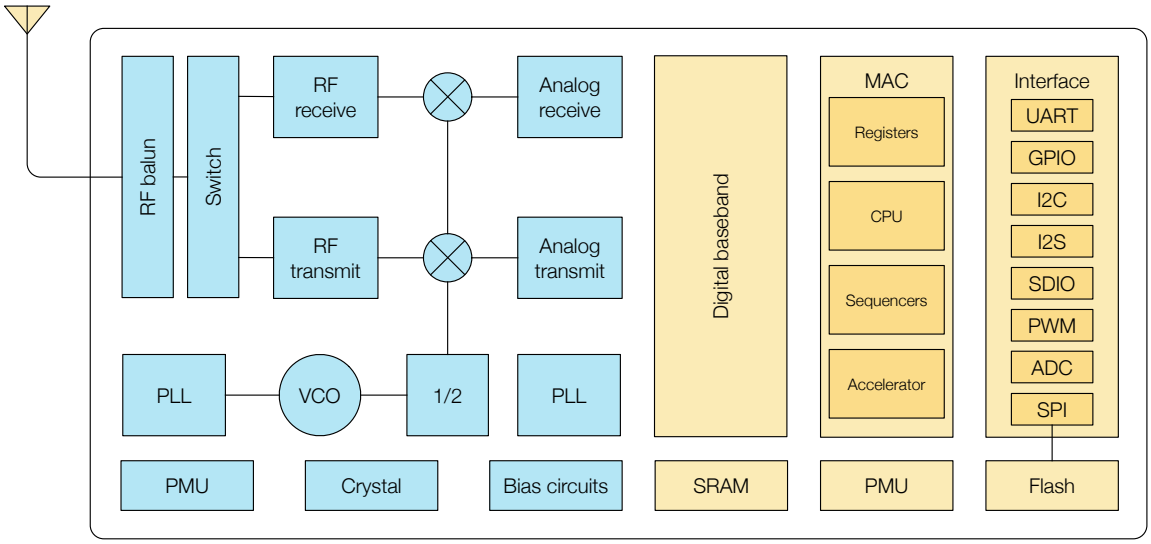


**Figure 3-1. Functional Block Diagram**

## 3.1. CPU, Memory, and Flash

### 3.1.1. CPU

ESP8266EX integrates Tensilica L106 32-bit micro controller (MCU) and ultra-low-power 16-bit RSIC. The CPU clock speed is 80 MHz. It can also reach a maximum value of 160 MHz. Real Time Operation System (RTOS) is enabled. Currently, only 20% of MIPS has been occupied by the Wi-Fi stack, the rest can all be used for user application programming and development. The CPU includes the interfaces as below.

- Programmable RAM/ROM interfaces (iBus), which can be connected with memory controller, and can also be used to visit flash.
- Data RAM interface (dBus), which can connected with memory controller.
- AHB interface which can be used to visit the register.

### 3.1.2. Memory

ESP8266EX Wi-Fi SoC integrates memory controller and memory units including SRAM and ROM. MCU can access the memory units through iBus, dBus, and AHB interfaces. All memory units can be accessed upon request, while a memory arbiter will decide the running sequence according to the time when these requests are received by the processor.

According to our current version of SDK, SRAM space available to users is assigned as below.

- RAM size < 50 kB, that is, when ESP8266EX is working under the Station mode and connects to the router, programmable space accessible in heap + data section is around 50 kB.
- There is no programmable ROM in the SoC, therefore, user program must be stored in an external SPI flash.

### 3.1.3. External Flash

ESP8266EX uses external SPI flash to store user programs, and supports up to 16 MB memory capacity theoretically.

The minimum flash memory of ESP8266EX is shown in Table 3-1.

**Table 3-1. Minimum Flash Memory**

| OTA | Minimum Flash Memory |
|---|---|
| Disabled | 512 kB |
| Enabled | 1 MB |

## 3.2. AHB and AHB Blocks

The AHB block performs as an arbiter. It controls the AHB interfaces through the MAC, SDIO (host) and CPU. Depending on the address, the AHB data requests can go into one of the two slaves.

- APB block
- Flash controller (usually for standalone applications)

Data requests to the memory controller are usually high speed requests, and requests to the APB block are usually register access.

The APB block acts as a decoder that only accesses the programmable registers within the main blocks of ESP8266EX. Depending on the address, the APB request can go to radio, SI/SPI, SDIO (host), GPIO, UART, real-time clock (RTC), MAC or digital baseband.

## 3.3. Clock

### 3.3.1. High Frequency Clock

The high frequency clock on ESP8266EX is used to drive both transmit and receive mixers. This clock is generated from internal crystal oscillator and external crystal. The crystal frequency ranges from 24 MHz to 52 MHz.

The internal calibration inside the crystal oscillator ensures that a wide range of crystals can be used, nevertheless the quality of the crystal is still a factor to consider to have reasonable phase noise and good Wi-Fi sensitivity. Refer to Table 3-2 to measure the frequency offset.

Table 3-2. High Frequency Clock Specifications

| Parameter | Symbol | Min | Max | Unit |
|---|---|---|---|---|
| Frequency | FXO | 24 | 52 | MHz |
| Loading capacitance | CL | – | 32 | pF |
| Motional capacitance | CM | 2 | 5 | pF |
| Series resistance | RS | 0 | 65 | Ω |
| Frequency tolerance | ΔFXO | -15 | 15 | ppm |
| Frequency vs temperature (-25°C ~ 75°C) | ΔFXO,Temp | -15 | 15 | ppm |

### 3.3.2. External Clock Requirements

An externally generated clock is available with the frequency ranging from 24 MHz to 52 MHz. The following characteristics are expected to achieve good performance of radio.

Table 3-3. External Clock Reference

| Parameter | Symbol | Min | Max | Unit |
|---|---|---|---|---|
| Clock amplitude | VXO | 0.8 | 1.5 | Vpp |
| External clock accuracy | ΔFXO,EXT | -15 | 15 | ppm |
| Phase noise @1kHz offset, 40 MHz clock | – | – | -120 | dBc/Hz |
| Phase noise @10kHz offset, 40 MHz clock | – | – | -130 | dBc/Hz |
| Phase noise @100kHz offset, 40 MHz clock | – | – | -138 | dBc/Hz |

## 3.4. Radio

ESP8266EX radio consists of the following blocks.

- 2.4 GHz receiver
- 2.4 GHz transmitter
- High speed clock generators and crystal oscillator
- Real time clock
- Bias and regulators
- Power management

### 3.4.1. Channel Frequencies

The RF transceiver supports the following channels according to IEEE802.11b/g/n standards.

Table 3-4. Frequency Channel

| Channel No. | Frequency (MHz) | Channel No. | Frequency (MHz) |
|---|---|---|---|
| 1 | 2412 | 8 | 2447 |
| 2 | 2417 | 9 | 2452 |
| 3 | 2422 | 10 | 2457 |
| 4 | 2427 | 11 | 2462 |
| 5 | 2432 | 12 | 2467 |
| 6 | 2437 | 13 | 2472 |
| 7 | 2442 | 14 | 2484 |

### 3.4.2. 2.4 GHz Receiver

The 2.4 GHz receiver down-converts the RF signals to quadrature baseband signals and converts them to the digital domain with 2 high resolution high speed ADCs. To adapt to varying signal channel conditions, RF filters, automatic gain control (AGC), DC offset cancelation circuits and baseband filters are integrated within ESP8266EX.

### 3.4.3. 2.4 GHz Transmitter

The 2.4 GHz transmitter up-converts the quadrature baseband signals to 2.4 GHz, and drives the antenna with a high-power CMOS power amplifier. The function of digital calibration further improves the linearity of the power amplifier, enabling a state of art performance of delivering +19.5 dBm average power for 802.11b transmission and +16 dBm for 802.11n transmission.

Additional calibrations are integrated to offset any imperfections of the radio, such as:

- Carrier leakage
- I/Q phase matching
- Baseband nonlinearities

These built-in calibration functions reduce the product test time and make the test equipment unnecessary.

### 3.4.4. Clock Generator

The clock generator generates quadrature 2.4 GHz clock signals for the receiver and transmitter. All components of the clock generator are integrated on the chip, including all inductors, varactors, filters, regulators and dividers.

The clock generator has built-in calibration and self test circuits. Quadrature clock phases and phase noise are optimized on-chip with patented calibration algorithms to ensure the best performance of the receiver and transmitter.

## 3.5. Wi-Fi

ESP8266EX implements TCP/IP, the full 802.11 b/g/n/e/i WLAN MAC protocol and Wi-Fi Direct specification. It supports not only basic service set (BSS) operations under the distributed control function (DCF) but also P2P group operation compliant with the latest Wi-Fi P2P protocol. Low level protocol functions are handled automatically by ESP8266EX.

- RTS/CTS
- acknowledgement
- fragmentation and defragmentation
- aggregation
- frame encapsulation (802.11h/RFC 1042)
- automatic beacon monitoring / scanning, and
- P2P Wi-Fi direct

Like P2P discovery procedure, passive or active scanning is performed autonomously once initiated by the appropriate command. Power management is handled with minimum interaction with host to minimize active duty period.

## 3.6. Power Management

ESP8266EX is designed with advanced power management technologies and intended for mobile devices, wearable electronics and the Internet of Things applications.

The low-power architecture operates in 3 modes: active mode, sleep mode and Deep-sleep mode. ESP8266EX consumes about 20 μA of power in Deep-sleep mode (with RTC clock still running) and less than 1.0 mA (DTIM=3) or less than 0.6 mA (DTIM=10) to stay connected to the access point.

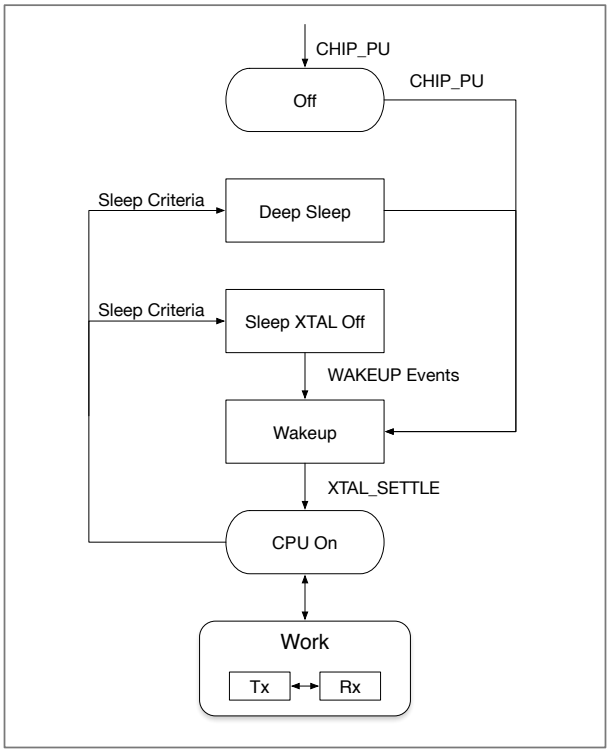


**Figure 3-2. Power Management**

- **Off**: CHIP_PU pin is low. The RTC is disabled. All registers are cleared.
- **Deep-sleep**: Only RTC is powered on – the rest of the chip is powered off. Recovery memory of RTC can save basic Wi-Fi connection information.
- **Sleep**: Only the RTC is operating. The crystal oscillator is disabled. Any wake-up events (MAC, host, RTC timer, external interrupts) will put the chip into the wakeup mode.
- **Wakeup**: In this state, the system switches from the sleep states to the PWR mode. The crystal oscillator and PLLs are enabled.
- **On**: The high speed clock is able to operate and sent to each block enabled by the clock control register. Lower level clock gating is implemented at the block level, including the CPU, which can be gated off using the WAITI instruction while the system is on.

# 4. Peripheral Interface

## 4.1. General Purpose Input/Output Interface (GPIO)

ESP8266EX has 17 GPIO pins which can be assigned to various functions by programming the appropriate registers.

Each GPIO can be configured with internal pull-up or pull-down, or set to high impedance, and when configured as an input, the data are stored in software registers; the input can also be set to edge-trigger or level trigger CPU interrupts. In short, the IO pads are bi-directional, non-inverting and tristate, which includes input and output buffer with tristate control inputs.

These pins can be multiplexed with other functions such as I2C, I2S, UART, PWM, IR Remote Control, LED Light and Button etc.

For low power operations, the GPIOs can also be set to hold their state. For instance, when the chip is powered down, all output enable signals can be set to hold low.

Optional hold functionality can be built into the IO if requested. When the IO is not driven by the internal or external circuitry, the hold functionality can be used to hold the state to the last used state. The hold functionality introduces some positive feedback into the pad. Hence, the external driver that drives the pad must be stronger than the positive feedback. The required drive strength is small — in the range of 5 μA to pull apart the latch.

## 4.2. Secure Digital Input/Output Interface (SDIO)

ESP8266EX has one Slave SDIO, the definitions of which are described as Table 4-1.

**Table 4-1. Pin Definitions of SDIOs**

| Pin Name | Pin Num | IO | Function Name |
|---|---|---|---|
| SDIO_CLK | 21 | IO6 | SDIO_CLK |
| SDIO_DATA0 | 22 | IO7 | SDIO_DATA0 |
| SDIO_DATA1 | 23 | IO8 | SDIO_DATA1 |
| SDIO_DATA_2 | 18 | IO9 | SDIO_DATA_2 |
| SDIO_DATA_3 | 19 | IO10 | SDIO_DATA_3 |
| SDIO_CMD | 20 | IO11 | SDIO_CMD |

📖 ***Note:***

*4-bit 25 MHz SDIO v1.1 and 4-bit 50 MHz SDIO v2.0 are supported.*

## 4.3. Serial Peripheral Interface (SPI/HSPI)

ESP8266EX has 3 SPIs.

- One general Slave/Master SPI
- One Slave SDIO/SPI
- One general Slave/Master HSPI

Functions of all these pins can be implemented via hardware. The pin definitions are described as below.

### 4.3.1. General SPI (Master/Slave)

**Table 4-2. Pin Definitions of SPIs**

| Pin Name | Pin Num | IO | Function Name |
|---|---|---|---|
| SDIO_CLK | 21 | IO6 | SPICLK |
| SDIO_DATA0 | 22 | IO7 | SPIQ/MISO |
| SDIO_DATA1 | 23 | IO8 | SPID/MOSI |
| SDIO_DATA_2 | 18 | IO9 | SPIHD |
| SDIO_DATA_3 | 19 | IO10 | SPIWP |
| U0TXD | 26 | IO1 | SPICS1 |
| GPIO0 | 15 | IO0 | SPICS2 |

📖 ***Note:***

*SPI mode can be implemented via software programming. The clock frequency is 80 MHz at maximum.*

### 4.3.2. HSPI (Slave)

**Table 4-3. Pin Definitions of HSPI (Slave)**

| Pin Name | Pin Num | IO | Function Name |
|---|---|---|---|
| MTMS | 9 | IO14 | HSPICLK |
| MTDI | 10 | IO12 | HSPIQ/MISO |
| MTCK | 12 | IO13 | HSPID/MOSI |
| MTDO | 13 | IO15 | HPSICS |

## 4.4. I2C Interface

ESP8266EX has one I2C used to connect with micro-controller and other peripheral equipments such as sensors. The pin definition of I2C is as below.

Table 4-4. Pin Definitions of I2C

| Pin Name | Pin Num | IO | Function Name |
|---|---|---|---|
| MTMS | 9 | IO14 | I2C_SCL |
| GPIO2 | 14 | IO2 | I2C_SDA |

Both I2C Master and I2C Slave are supported. I2C interface functionality can be realized via software programming, and the clock frequency is 100 kHz at a maximum. It should be noted that I2C clock frequency should be higher than the slowest clock frequency of the slave device.

## 4.5. I2S Interface

ESP8266EX has one I2S data input interface and one I2S data output interface. I2S interfaces are mainly used in applications such as data collection, processing, and transmission of audio data, as well as the input and output of serial data. For example, LED lights (WS2812 series) are supported. The pin definition of I2S is shown in Table 4-5. I2S functionality can be enabled via software programming by using multiplexed GPIOs, and linked list DMA is supported.

Table 4-5. Pin Definitions of I2S

| I2S Data Input | | | |
|---|---|---|---|
| Pin Name | Pin Num | IO | Function Name |
| MTDI | 10 | IO12 | I2SI_DATA |
| MTCK | 12 | IO13 | I2SI_BCK |
| MTMS | 9 | IO14 | I2SI_WS |
| MTDO | 13 | IO15 | I2SO_BCK |
| U0RXD | 25 | IO3 | I2SO_DATA |
| GPIO2 | 14 | IO2 | I2SO_WS |

## 4.6. Universal Asynchronous Receiver Transmitter (UART)

ESP8266EX has two UART interfaces UART0 and UART, the definitions are shown in Table 4-6.

Table 4-6. Pin Definitions of UART

| Pin Type | Pin Name | Pin Num | IO | Function Name |
|---|---|---|---|---|
| UART0 | U0RXD | 25 | IO3 | U0RXD |
| | U0TXD | 26 | IO1 | U0TXD |
| | MTDO | 13 | IO15 | U0RTS |

| Pin Type | Pin Name | Pin Num | IO | Function Name |
|---|---|---|---|---|
| | MTCK | 12 | IO13 | U0CTS |
| UART1 | GPIO2 | 14 | IO2 | U1TXD |
| | SD_D1 | 23 | IO8 | U1RXD |

Data transfers to/from UART interfaces can be implemented via hardware. The data transmission speed via UART interfaces reaches 115200 x 40 (4.5 Mbps).

UART0 can be used for communication. It supports fluid control. Since UART1 features only data transmit signal (Tx), it is usually used for printing log.

> 📖 ***Note:***
>
> *By default, UART0 outputs some printed information when the device is powered on and booting up. The baud rate of the printed information is relevant to the frequency of the external crystal oscillator. If the frequency of the crystal oscillator is 40 MHz, then the baud rate for printing is 115200; if the frequency of the crystal oscillator is 26 MHz, then the baud rate for printing is 74880. If the printed information exerts any influence on the functionality of the device, it is suggested to block the printing during the power-on period by changing (U0TXD, U0RXD) to (MTDO, MTCK).*

## 4.7. Pulse-Width Modulation (PWM)

ESP8266EX has four PWM output interfaces. They can be extended by users themselves. The pin definitions of the PWM interfaces are defined as below.

**Table 4-7. Pin Definitions of PWM**

| Pin Name | Pin Num | IO | Function Name |
|---|---|---|---|
| MTDI | 10 | IO12 | PWM0 |
| MTDO | 13 | IO15 | PWM1 |
| MTMS | 9 | IO14 | PWM2 |
| GPIO4 | 16 | IO4 | PWM3 |

The functionality of PWM interfaces can be implemented via software programming. For example, in the LED smart light demo, the function of PWM is realized by interruption of the timer, the minimum resolution reaches as high as 44 ns. PWM frequency range is adjustable from 1000 μs to 10000 μs, i.e., between 100 Hz and 1 kHz. When the PWM frequency is 1 kHz, the duty ratio will be 1/22727, and a resolution of over 14 bits will be achieved at 1 kHz refresh rate.

## 4.8. IR Remote Control

One Infrared remote control interface is defined as below.

**Table 4-8. Pin Definitions of IR Remote Control**

| Pin Name | Pin Num | IO | Function Name |
|---|---|---|---|
| MTMS | 9 | IO14 | IR Tx |
| GPIO5 | 24 | IO 5 | IR Rx |

The functionality of Infrared remote control interface can be implemented via software programming. NEC coding, modulation, and demodulation are used by this interface. The frequency of modulated carrier signal is 38 kHz, while the duty ratio of the square wave is 1/3. The transmission range is around 1m which is determined by two factors: one is the maximum value of rated current, the other is internal current-limiting resistance value in the infrared receiver. The larger the resistance value, the lower the current, so is the power, and vice versa. The transmission angle is between 15° and 30° which is determined by the radiation direction of the infrared receiver.

## 4.9. ADC (Analog-to-Digital Converter)

ESP8266EX is embedded with a 10-bit precision SARADC. TOUT (Pin6) is defined as below.

**Table 4-9. Pin Definition of ADC**

| Pin Name | Pin Num | Function Name |
|---|---|---|
| TOUT | 6 | ADC Interface |

The following two functions can be implemented using ADC (Pin 6). However, they cannot be implemented at the same time.

- Test the power supply voltage of VDD3P3 (Pin 3 and Pin 4).

| | |
|---|---|
| Hardware Design | TOUT must be floating. |
| RF Initialization Parameter | The 107th byte of ***esp_init_data_default.bin*** (0 ~ 127 bytes), `vdd33_const` must be set to `0xFF`. |
| RF Calibration Process | Optimize the RF circuit conditions based on the testing results of VDD3P3 (Pin 3 and Pin 4). |
| User Programming | Use `system_get_vdd33` instead of `system_adc_read`. |

- Test the input voltage of TOUT (Pin 6).

| | |
|---|---|
| Hardware Design | The input voltage range is 0 to 1.0V when TOUT is connected to external circuit. |
| RF Initialization Parameter | The value of the 107th byte of ***esp_init_data_default.bin*** (0 ~ 127 bytes), `vdd33_const` must be set to the real power supply voltage of Pin 3 and Pin 4.<br>The working power voltage range of ESP8266EX is between 1.8V and 3.6V, while the unit of `vdd33_const` is 0.1V, therefore, the effective value range of `vdd33_const` is 18 to 36. |

| | |
|---|---|
| RF Calibration Process | Optimize the RF circuit conditions based on the value of `vdd33_const`. The permissible error is ±0.2V. |
| User Programming | Use `system_adc_read` instead of `system_get_vdd33`. |

📖 ***Notes:***

***esp_init_data_default.bin*** *is provided in SDK package which contains RF initialization parameters (0 ~ 127 bytes).*

*You can define the 107th byte in* ***esp_init_data_default.bin*** *to* `vdd33_const` *as below.*

- *If vdd33_const = 0xff, the power voltage of Pin 3 and Pin 4 will be tested by the internal self-calibration process of ESP8266EX itself. RF circuit conditions should be optimized according to the testing results.*
- *If 18 =< vdd33_const =< 36, ESP8266EX RF Calibration and optimization process is implemented via (vdd33_const/10).*
- *If vdd33_const < 18 or 36 < vdd33_const < 255, ESP8266EX RF Calibration and optimization process is implemented via the default value 2.5V.*

## 4.10. LED Light and Button

ESP8266EX features 17 GPIOs, all of which can be assigned to support various functions of LED lights and buttons. Definitions of some GPIOs that are assigned with certain functions in demo application design are shown as below.

**Table 4-10. Pin Definition of LED and Button**

| Pin Name | Pin Num | IO | Function Name |
|---|---|---|---|
| MTCK | 12 | IO 13 | Button (Reset) |
| GPIO0 | 15 | IO 0 | Wi-Fi Light |
| MTDI | 10 | IO 12 | Link Light |

Altogether three interfaces have been defined, one is for the button, while the other two are for LED light. Generally, MTCK is used for controlling the reset button; GPIO0 is used as an signal to indicate the Wi-Fi working state; MTDI is used as a signal light to indicate communication status between the device and the server.

📖 ***Note:***

*Most interfaces described in this chapter can be multiplexed. Pin definitions that can be defined is not limited to the ones herein mentioned; you can customize the functions of the pins according to your specific application scenarios via software programming and hardware design.*

# 5. Electrical Specifications

## 5.1. Electrical Characteristics

Table 5-1. Electrical Characteristics

| Parameters | | Conditions | Min | Typical | Max | Unit |
|---|---|---|---|---|---|---|
| Storage Temperature Range | | - | -40 | Normal | 125 | °C |
| Maximum Soldering Temperature | | IPC/JEDEC J-STD-020 | - | - | 260 | °C |
| Working Voltage Value | | — | 2.5 | 3.3 | 3.6 | V |
| I/O | $V_{IL}/V_{IH}$ | - | -0.3/0.75$V_{IO}$ | - | 0.25$V_{IO}$/3.6 | V |
| | $V_{OL}/V_{OH}$ | - | N/0.8$V_{IO}$ | - | 0.1$V_{IO}$/N | |
| | $I_{MAX}$ | - | - | - | 12 | mA |
| Electrostatic Discharge (HBM) | | TAMB=25°C | - | - | 2 | KV |
| Electrostatic Discharge (CDM) | | TAMB=25°C | - | - | 0.5 | KV |

## 5.2. Power Consumption

Table 5-2. Power Consumption

| Parameters | Min | Typical | Max | Unit |
|---|---|---|---|---|
| Tx802.11b, CCK 11Mbps, P OUT=+17dBm | - | 170 | - | mA |
| Tx 802.11g, OFDM 54Mbps, P OUT =+15dBm | - | 140 | - | mA |
| Tx 802.11n, MCS7, P OUT =+13dBm | - | 120 | - | mA |
| Rx 802.11b, 1024 bytes packet length , -80dBm | - | 50 | - | mA |
| Rx 802.11g, 1024 bytes packet length, -70dBm | - | 56 | - | mA |
| Rx 802.11n, 1024 bytes packet length, -65dBm | - | 56 | - | mA |
| Modem-sleep① | - | 15 | - | mA |
| Light-sleep② | - | 0.9 | - | mA |
| Deep-sleep③ | - | 20 | - | μA |
| Power Off | - | 0.5 | - | μA |

📖 ***Notes:***

① ***Modem-sleep*** *mode is used in the applications that require the CPU to be working, as in PWM or I2S applications. According to 802.11 standards (like U-APSD), it shuts down the Wi-Fi Modem circuit while maintaining a Wi-Fi connection with no data transmission to optimize power consumption. E.g. in DTIM3, maintaining a sleep of 300 ms with a wakeup of 3 ms cycle to receive AP's Beacon packages at interval requires about 15 mA current.*

② *During* ***Light-sleep*** *mode, the CPU may be suspended in applications like Wi-Fi switch. Without data transmission, the Wi-Fi Modem circuit can be turned off and CPU suspended to save power consumption according to the 802.11 standards (U-APSD). E.g. in DTIM3, maintaining a sleep of 300 ms with a wakeup of 3ms to receive AP's Beacon packages at interval requires about 0.9 mA current.*

③ *During* ***Deep-sleep*** *mode, Wi-Fi is turned off. For applications with long time lags between data transmission, e.g. a temperature sensor that detects the temperature every 100s, sleeps for 300s and wakes up to connect to the AP (taking about 0.3 ~ 1s), the overall average current is less than 1mA. The current of 20 μA is acquired at the voltage of 2.5V.*

## 5.3. Wi-Fi Radio Characteristics

The following data are from tests conducted at room temperature with 3.3V and 1.1V power supplies.

**Table 5-3. Wi-Fi Radio Characteristics**

| Parameters | Min | Typical | Max | Unit |
|---|---|---|---|---|
| Input frequency | 2412 | - | 2484 | MHz |
| Output impedance | - | 39+j6 | - | Ω |
| Input reflection | - | - | -10 | dB |
| Output power of PA for 72.2 Mbps | 15.5 | 16.5 | 17.5 | dBm |
| Output power of PA for 11b mode | 19.5 | 20.5 | 21.5 | dBm |
| Sensitivity | | | | |
| DSSS, 1 Mbps | - | -98 | - | dBm |
| CCK, 11 Mbps | - | -91 | - | dBm |
| 6 Mbps (1/2 BPSK) | - | -93 | - | dBm |
| 54 Mbps (3/4 64-QAM) | - | -75 | - | dBm |
| HT20, MCS7 (65 Mbps, 72.2 Mbps) | - | -72 | - | dBm |
| Adjacent Channel Rejection | | | | |
| OFDM, 6 Mbps | - | 37 | - | dB |
| OFDM, 54 Mbps | - | 21 | - | dB |
| HT20, MCS0 | - | 37 | - | dB |
| HT20, MCS7 | - | 20 | - | dB |

# 6. Package Information

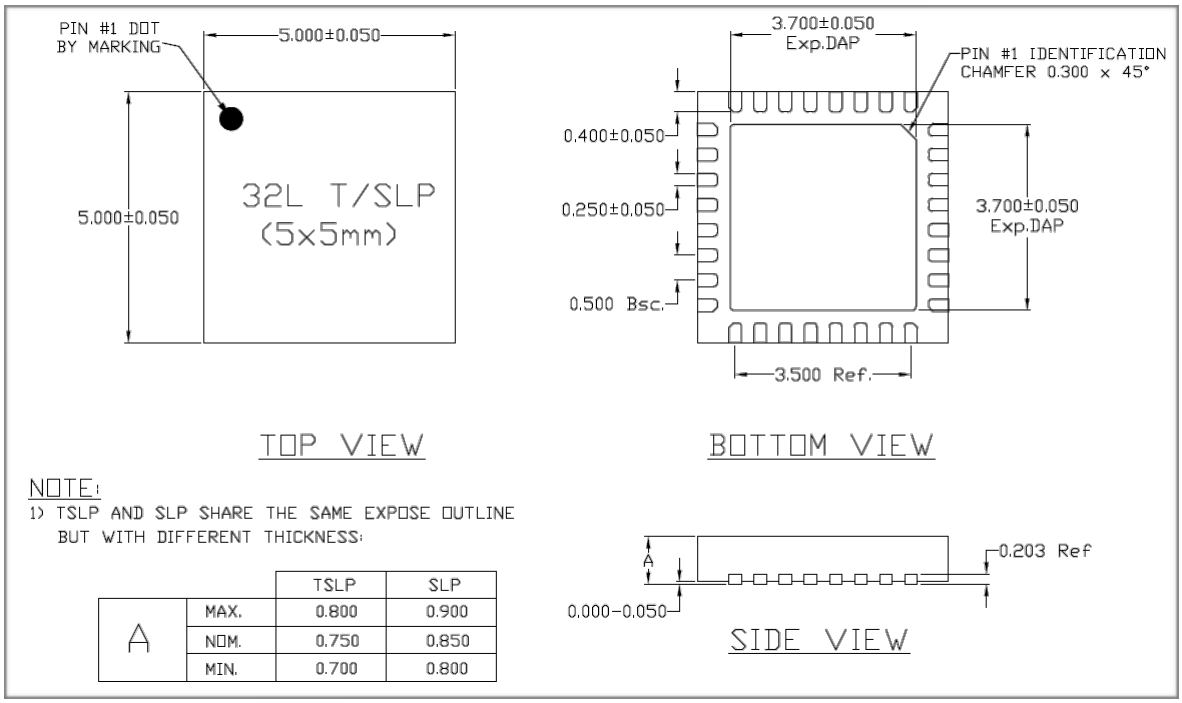


| | | TSLP | SLP |
|---|---|---|---|
| A | MAX. | 0.800 | 0.900 |
| | NOM. | 0.750 | 0.850 |
| | MIN. | 0.700 | 0.800 |

Figure 6-1. ESP8266EX Package

# I. Appendix - Pin List

For detailed pin information, please see *ESP8266 Pin List*.

- Digital Die Pin List
- Buffer Sheet
- Register List
- Strapping List

📖 ***Notes:***

- *INST_NAME refers to the IO_MUX REGISTER defined in* ***eagle_soc.h****, for example MTDI_U refers to PERIPHS_IO_MUX_MTDI_U.*
- *Net Name refers to the pin name in schematic.*
- *Function refers to the multifunction of each pin pad.*
- *Function number 1 ~ 5 correspond to FUNCTION 0 ~ 4 in SDK. For example, set MTDI to GPIO12 as follows.*
  - `#define FUNC_GPIO12  3 //defined in eagle_soc.h`
  - `PIN_FUNC_SELECT(PERIPHS_IO_MUX_MTDI_U,FUNC_GPIO12)`

# II. Appendix - Learning Resources

## II.1. Must-Read Documents

- *ESP8266 Quick Start Guide*

  Description: This document is a quick user guide to getting started with ESP8266. It includes an introduction to the ESP-LAUNCHER, instructions on how to download firmware to the board and run it, how to compile the AT application, as well as the structure and debugging method of RTOS SDK. Basic documentation and other related resources for the ESP8266 are also provided.
- *ESP8266 SDK Getting Started Guide*

  Description: This document takes ESP-LAUNCHER and ESP-WROOM-02 as examples of how to use the ESP8266 SDK. The contents include preparations before compilation, SDK compilation and firmware download.
- *ESP8266 Pin List*

  Description: This link directs you to a list containing the type and function of every ESP8266 pin.
- *ESP8266 System Description*

  Description: This document provides a technical description of the ESP8266 series of products, including ESP8266EX, ESP-LAUNCHER and ESP-WROOM.
- *ESP8266 Hardware Matching Guide*

  Description: This document introduces the frequency offset tuning and antenna impedance matching for ESP8266 in order to achieve optimal RF performance.
- *ESP8266 Technical Reference*

  Description: This document provides an introduction to the interfaces integrated on ESP8266. Functional overview, parameter configuration, function description, application demos and other pieces of information are included.
- *ESP8266 Hardware Resources*

  Description: This zip package includes manufacturing specifications of the ESP8266 board and the modules, manufacturing BOM and schematics.
- *FAQ*

## II.2. Must-Have Resources

- *ESP8266 SDKs*

Description: This webpage provides links both to the latest version of the ESP8266 SDK and the older ones.

- *ESP8266 Tools*

  Description: This webpage provides links to both the ESP8266 flash download tools and the ESP8266 performance evaluation tools.

- *ESP8266 APK*
- *ESP8266 Certification and Test Guide*
- *ESP8266 BBS*
- *ESP8266 Resources*

Espressif IOT Team

*www.espressif.com*

**Disclaimer and Copyright Notice**

Information in this document, including URL references, is subject to change without notice.

THIS DOCUMENT IS PROVIDED AS IS WITH NO WARRANTIES WHATSOEVER, INCLUDING ANY WARRANTY OF MERCHANTABILITY, NON-INFRINGEMENT, FITNESS FOR ANY PARTICULAR PURPOSE, OR ANY WARRANTY OTHERWISE ARISING OUT OF ANY PROPOSAL, SPECIFICATION OR SAMPLE.

All liability, including liability for infringement of any proprietary rights, relating to use of information in this document is disclaimed. No licenses express or implied, by estoppel or otherwise, to any intellectual property rights are granted herein.

The Wi-Fi Alliance Member logo is a trademark of the Wi-Fi Alliance. The Bluetooth logo is a registered trademark of Bluetooth SIG.

All trade names, trademarks and registered trademarks mentioned in this document are property of their respective owners, and are hereby acknowledged.

**Copyright © 2017 Espressif Inc. All rights reserved.**