Mounting Option
158-.468 (11.89) Offset Card Guides

Contact Detail
521-P.C. Tail .037x.015(0.94x0.38) - Tail LG.=.125(3.18)
.156 [3.96] Contact Spacing with Single Centreline Row

THIS IS A C.A.D. GENERATED DRAWING
DO NOT MAKE MANUAL REVISIONS TO MASTER

ISSUE NUMBER
ORIGINAL ①

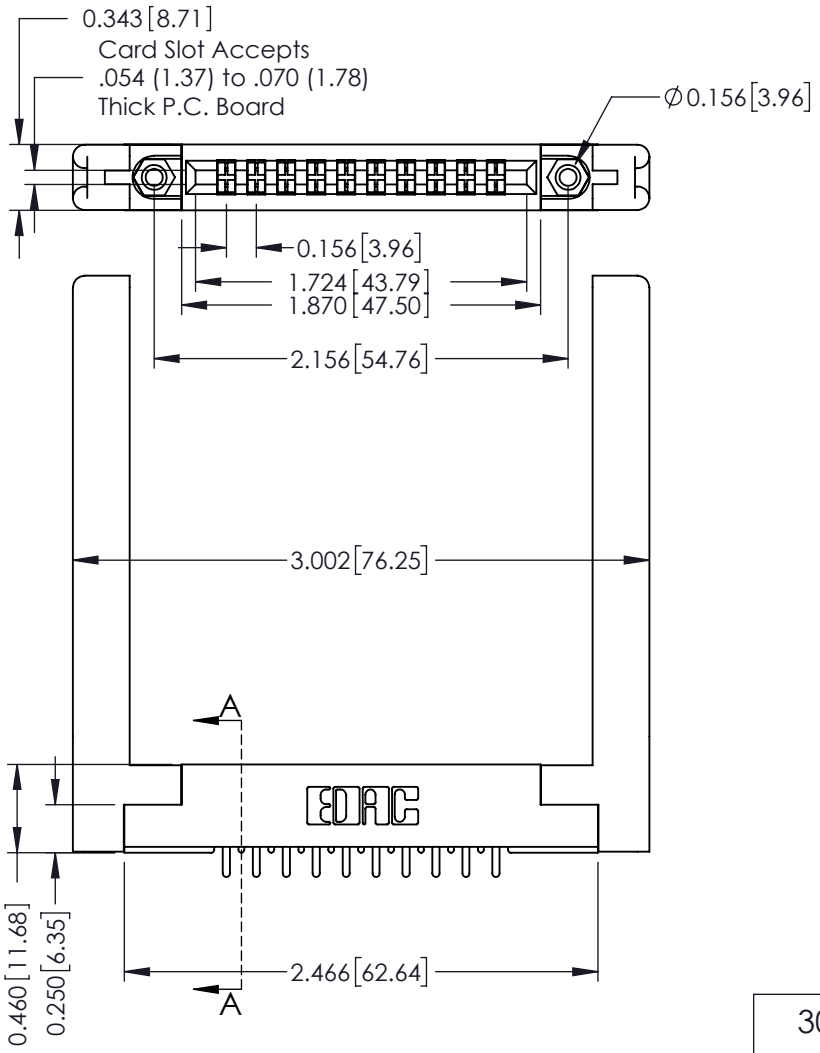

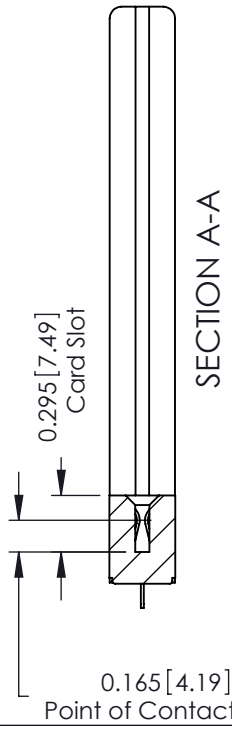

See Accompanying Pages for:
- **Mounting Options**
- **Features and Specifications**

306 / 316 / 356 Card Edge Connector
Part Number: 356-010-521-158

EDAC INC
TORONTO, ONTARIO
CANADA
YOUR CONNECTION TO QUALITY & SERVICE

THESE DRAWINGS AND SPECIFICATIONS ARE THE PROPERTY OF EDAC INC., AND SHALL NOT BE REPRODUCED, OR COPIED OR USED AS THE BASIS FOR THE MANUFACTURE OR SALE OF APPARATUS WITHOUT WRITTEN PERMISSION.

ACAD REFERENCE NO.	306 ENG MASTER
DRAWN: J.LEE	DATE: SEPT. 14/09
CHECKED:	DATE:
SCALE: NTS	SHEET 1 OF 2
DRAWING NUMBER: 306 Assembly	ISSUE: 1

THIS IS A C.A.D. GENERATED DRAWING
DO NOT MAKE MANUAL REVISIONS TO MASTER

ISSUE NUMBER
ORIGINAL 1

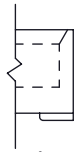

Code x01

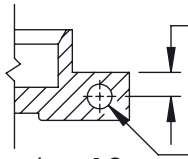

Code x12

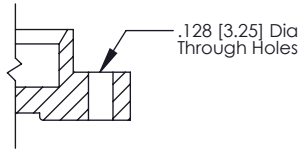

Code x02

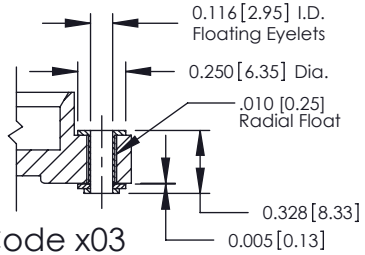

Code x03

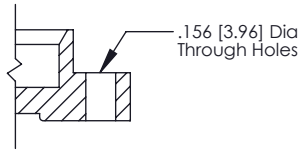

Code x04

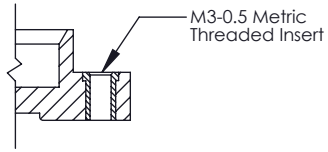

Code x07

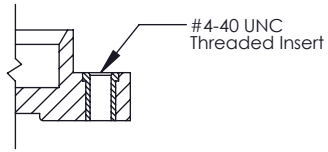

Code x08

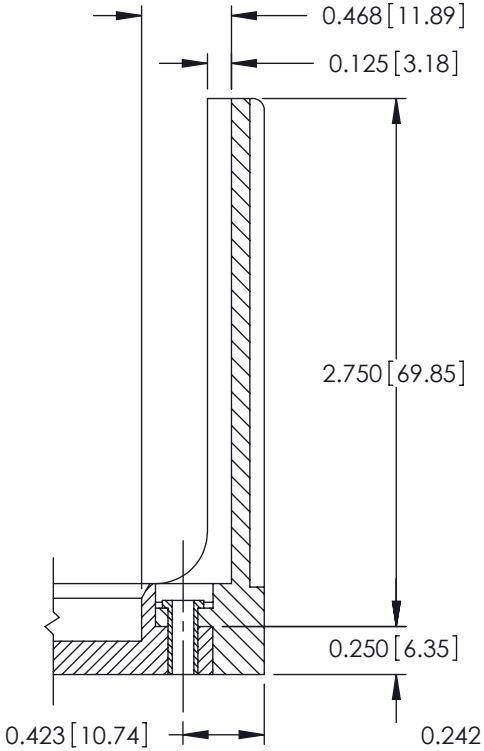

Code x58

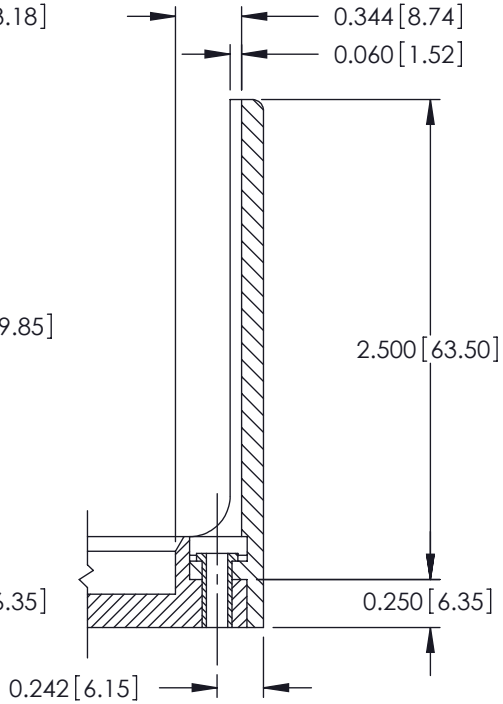

Code x68

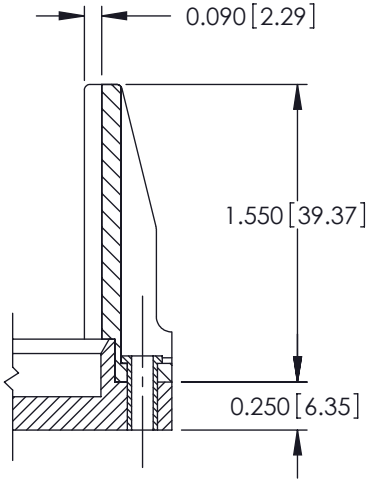

Code x78

306 / 316 / 356 Card Edge Connector Mounting Options

ACAD REFERENCE NO.	306 ENG MASTER
DRAWN: J.LEE	DATE: SEPT. 14/09
CHECKED:	DATE:
SCALE: NTS	SHEET 2 OF 2
DRAWING NUMBER: 306 Assembly	ISSUE: 1

EDAC INC
TORONTO, ONTARIO
CANADA
YOUR CONNECTION TO QUALITY & SERVICE

THESE DRAWINGS AND SPECIFICATIONS ARE THE PROPERTY OF EDAC INC., AND SHALL NOT BE REPRODUCED, OR COPIED OR USED AS THE BASIS FOR THE MANUFACTURE OR SALE OF APPARATUS WITHOUT WRITTEN PERMISSION.