CY8C27143, CY8C27243
CY8C27443, CY8C27543
CY8C27643

PSoC® Programmable System-on-Chip™

Features

- Powerful Harvard-architecture processor
  - M8C processor speeds up to 24 MHz
  - 8 × 8 multiply, 32-bit accumulate
  - Low power at high speed
  - Operating voltage: 3.0 V to 5.25 V
  - Operating voltages down to 1.0 V using on-chip switch mode pump (SMP)
  - Industrial temperature range: –40 °C to +85 °C
- Advanced peripherals (PSoC® blocks)
  - Tweleve rail-to-rail analog PSoC blocks provide:
    - Up to 14-bit analog-to-digital converters (ADCs)
    - Up to 9-bit digital-to-analog converters (DACs)
    - Programmable gain amplifiers (PGAs)
    - Programmable filters and comparators
  - Eight digital PSoC blocks provide:
    - 8- to 32-bit timers, counters, and pulse width modulators (PWMs)
    - Cyclical redundancy check (CRC) and pseudo random sequence (PRS) modules
    - Up to two full-duplex universal asynchronous receiver transmitters (UARTs)
    - Multiple serial peripheral interface (SPI) masters or slaves
    - Connectable to all general-purpose I/O (GPIO) pins
  - Complex peripherals by combining blocks
- Precision, programmable clocking
  - Internal 2.5% 24- / 48-MHz main oscillator
  - 24- / 48-MHz with optional 32 kHz crystal
  - Optional external oscillator up to 24 MHz
  - Internal oscillator for watchdog and sleep
- Flexible on-chip memory
  - 16 KB flash program storage 50,000 erase/write cycles
  - 256-bytes SRAM data storage
  - In-system serial programming (ISSP)
  - Partial flash updates
  - Flexible protection modes
  - Electronically erasable programmable read only memory (EEPROM) emulation in flash
- Programmable pin configurations
  - 25-mA sink, 10-mA source on all GPIOs
  - Pull-up, pull-down, high-Z, strong, or open-drain drive modes on all GPIOs
  - Eight standard analog inputs on GPIO, plus four additional analog inputs with restricted routing
  - Four 30-mA analog outputs on GPIOs
  - Configurable interrupt on all GPIOs
- Additional system resources
  - I^2C slave, master, and multi-master to 400 kHz
  - Watchdog and sleep timers
  - User-configurable low-voltage detection (LVD)
  - Integrated supervisory circuit
  - On-chip precision voltage reference
- Complete development tools
  - Free development software (PSoC Designer™)
  - Full-featured, in-circuit emulator (ICE) and programmer
  - Full-speed emulation
  - Complex breakpoint structure
  - 128 KB trace memory

Logic Block Diagram

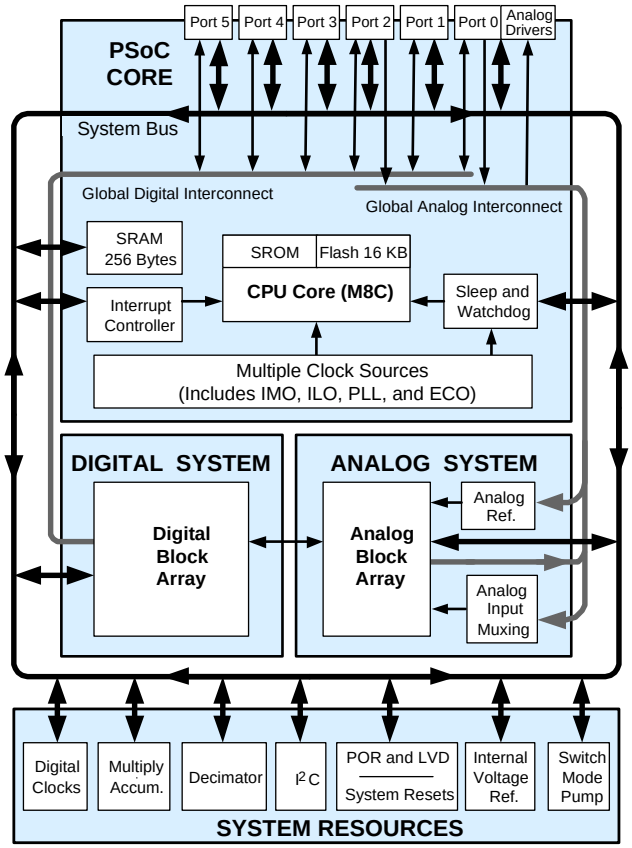

Contents

PSoC Functional Overview 3
PSoC Core 3
Digital System 3
Analog System 4
Additional System Resources 5
PSoC Device Characteristics 5
Getting Started 6
Application Notes 6
Development Kits 6
Training 6
CYPros Consultants 6
Solutions Library 6
Technical Support 6
Development Tools 7
PSoC Designer Software Subsystems 7
Designing with PSoC Designer 8
Select User Modules 8
Configure User Modules 8
Organize and Connect 8
Generate, Verify, and Debug 8
Pinouts 9
8-pin Part Pinout 9
20-pin Part Pinout 9
28-pin Part Pinout 10
44-pin Part Pinout 11
48-pin Part Pinout 12
56-pin Part Pinout 14
Register Reference 16
Register Conventions 16
Register Mapping Tables 16
Electrical Specifications 19
Absolute Maximum Ratings 19
Operating Temperature 20
DC Electrical Characteristics 20
AC Electrical Characteristics 35
Packaging Information 44
Packaging Dimensions 44
Thermal Impedances 50
Capacitance on Crystal Pins 50
Solder Reflow Specifications 50
Development Tool Selection 51
Software 51
Development Kits 51
Evaluation Tools 51
Device Programmers 52
Accessories (Emulation and Programming) 52
Ordering Information 53
Ordering Code Definitions 54
Acronyms 55
Reference Documents 55
Document Conventions 56
Units of Measure 56
Numeric Conventions 56
Glossary 56
Document History Page 61
Sales, Solutions, and Legal Information 63
Worldwide Sales and Design Support 63
Products 63
PSoC Solutions 63

PSoC Functional Overview

The PSoC family consists of many programmable system-on-chip controller devices. These devices are designed to replace multiple traditional microcontroller unit (MCU)-based system components with one, low-cost single-chip programmable device. PSoC devices include configurable blocks of analog and digital logic, as well as programmable interconnects. This architecture lets you to create customized peripheral configurations that match the requirements of each individual application. Additionally, a fast central processing unit (CPU), flash program memory, SRAM data memory, and configurable I/O are included in a range of convenient pinouts and packages.

The PSoC architecture, as illustrated in Logic Block Diagram on page 1, consists of four main areas: PSoC core, digital system, analog system, and system resources. Configurable global busing allows all the device resources to be combined into a complete custom system. The PSoC CY8C27x43 family can have up to five I/O ports that connect to the global digital and analog interconnects, providing access to eight digital blocks and 12 analog blocks.

PSoC Core

The PSoC core is a powerful engine that supports a rich feature set. The core includes a CPU, memory, clocks, and configurable GPIO.

The M8C CPU core is a powerful processor with speeds up to 24 MHz, providing a four MIPS 8-bit Harvard architecture microprocessor. The CPU uses an interrupt controller with 17 vectors, to simplify programming of real time embedded events. Program execution is timed and protected using the included sleep and watchdog timers (WDT).

Memory encompasses 16 KB of flash for program storage, 256 bytes of SRAM for data storage, and up to 2 K of EEPROM emulated using the flash. Program flash uses four protection levels on blocks of 64 bytes, allowing customized software IP protection.

The PSoC device incorporates flexible internal clock generators, including a 24-MHz internal main oscillator (IMO) accurate to 2.5% over temperature and voltage. The 24-MHz IMO can also be doubled to 48 MHz for use by the digital system. A low power 32-kHz internal low speed oscillator (ILO) is provided for the sleep timer and WDT. If crystal accuracy is desired, the 32.768-kHz external crystal oscillator (ECO) is available for use as a Real Time Clock (RTC) and can optionally generate a crystal-accurate 24-MHz system clock using a PLL. The clocks, together with programmable clock dividers (as a system resource), provide the flexibility to integrate almost any timing requirement into the PSoC device.

PSoC GPIOs provide connection to the CPU, digital and analog resources of the device. Each pin's drive mode may be selected from eight options, allowing great flexibility in external interfacing. Every pin also has the capability to generate a system interrupt on high level, low level, and change from last read.

Digital System

The digital system is composed of eight digital PSoC blocks. Each block is an 8-bit resource that can be used alone or combined with other blocks to form 8-, 16-, 24-, and 32-bit peripherals, which are called user modules.

Figure 1. Digital System Block Diagram

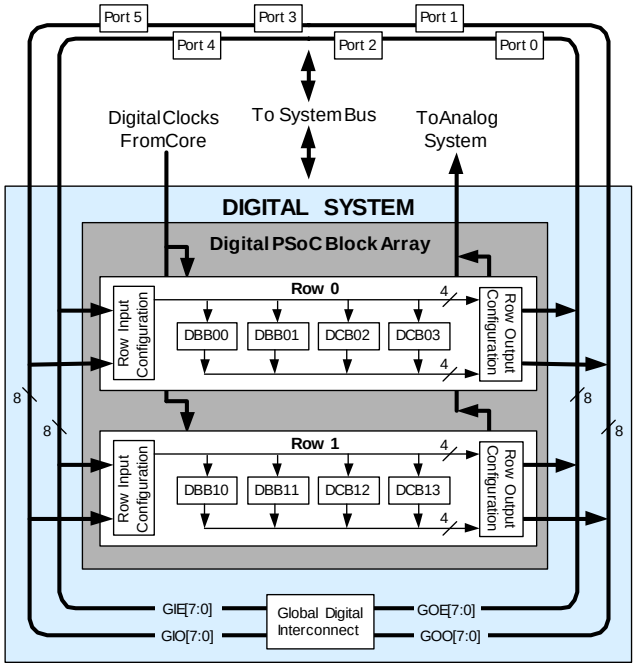

Digital peripheral configurations include:

- PWMs (8- to 32-bit)
- PWMs with dead band (8- to 32-bit)
- Counters (8- to 32-bit)
- Timers (8- to 32-bit)
- UART 8-bit with selectable parity (up to two)
- SPI slave and master (up to two)
- I^2C slave and multi-master (one available as a system resource)
- CRC/generator (8- to 32-bit)
- IrDA (up to two)
- Pseudo random sequence (PRS) generators (8- to 32-bit)

The digital blocks can be connected to any GPIO through a series of global buses that can route any signal to any pin. The buses also enable signal multiplexing and for performing logic operations. This configurability frees your designs from the constraints of a fixed peripheral controller.

Digital blocks are provided in rows of four, where the number of blocks varies by PSoC device family. This lets you the optimum choice of system resources for your application. Family resources are shown in the table titled PSoC Device Characteristics on page 5.

Analog System

The analog system is composed of 12 configurable blocks, each comprised of an opamp circuit allowing the creation of complex analog signal flows. Analog peripherals are very flexible and can be customized to support specific application requirements. Some of the more common PSoC analog functions (most available as user modules) are as follows:

- ADCs (up to 4, with 6- to 14-bit resolution, selectable as incremental, delta sigma, and SAR)
- Filters (2, 4, 6, and 8 pole band pass, low pass, and notch)
- Amplifiers (up to four, with selectable gain to 48x)
- Instrumentation amplifiers (up to two, with selectable gain to 93x)
- Comparators (up to four, with 16 selectable thresholds)
- DACs (up to four, with 6- to 9-bit resolution)
- Multiplying DACs (up to four, with 6- to 9-bit resolution)
- High current output drivers (four with 30 mA drive as a core resource)
- 1.3-V reference (as a system resource)
- DTMF dialer
- Modulators
- Correlators
- Peak detectors
- Many other topologies possible

Analog blocks are provided in columns of three, which includes one continuous time (CT) and two switched capacitor (SC) blocks, as shown in the following figure.

Figure 2. Analog System Block Diagram

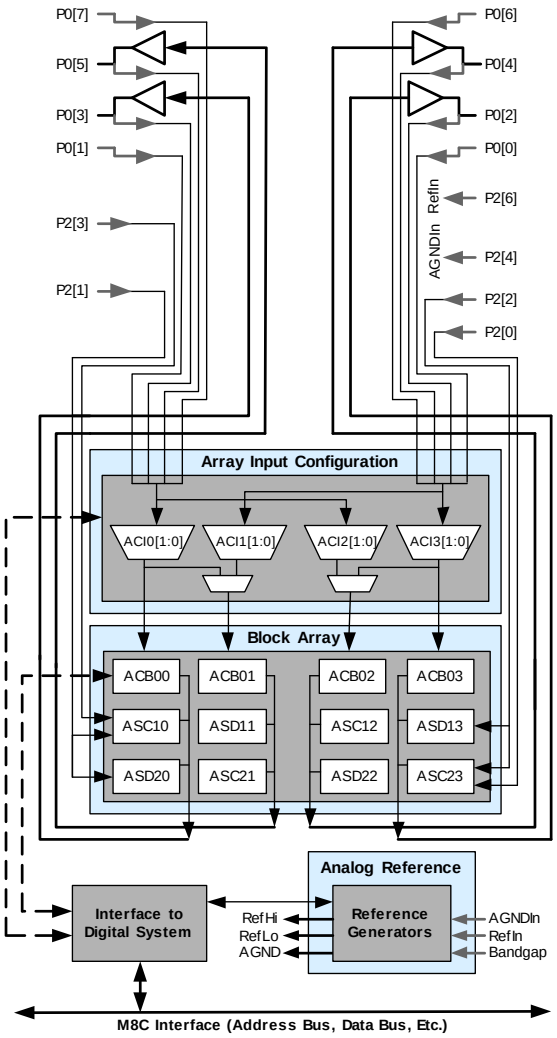

Additional System Resources

System resources, some of which have been previously listed, provide additional capability useful to complete systems. Additional resources include a multiplier, decimator, switch mode pump, low voltage detection, and power on reset.

- Digital clock dividers provide three customizable clock frequencies for use in applications. The clocks can be routed to both the digital and analog systems. Additional clocks can be generated using digital PSoC blocks as clock dividers.
- Multiply accumulate (MAC) provides fast 8-bit multiplier with 32-bit accumulate, to assist in general math and digital filters.
- The decimator provides a custom hardware filter for digital signal processing applications including the creation of Delta Sigma ADCs.
- The I^2C module provides 100 and 400 kHz communication over two wires. Slave, master, and multi-master modes are all supported.
- LVD interrupts can signal the application of falling voltage levels, while the advanced power-on reset (POR) circuit eliminates the need for a system supervisor.
- An internal 1.3-V reference provides an absolute reference for the analog system, including ADCs and DACs.
- An integrated switch mode pump (SMP) generates normal operating voltages from a single 1.2-V battery cell, providing a low cost boost converter.

PSoC Device Characteristics

Depending on your PSoC device characteristics, the digital and analog systems can have 16, 8, or 4 digital blocks and 12, 6, or 4 analog blocks. The following table lists the resources available for specific PSoC device groups.The PSoC device covered by this datasheet is highlighted in Table 1.

Table 1. PSoC Device Characteristics

PSoC Part Number	Digital I/O	Digital Rows	Digital Blocks	Analog Inputs	Analog Outputs	Analog Columns	Analog Blocks	SRAM Size	Flash Size
CY8C29x66	up to 64	4	16	up to 12	4	4	12	2 K	32 K
CY8C28xxx	up to 44	up to 3	up to 12	up to 44	up to 4	up to 6	up to 12 + 4[1]	1 K	16 K
CY8C27x43	up to 44	2	8	up to 12	4	4	12	256	16 K
CY8C24x94	up to 56	1	4	up to 48	2	2	6	1 K	16 K
CY8C24x23A	up to 24	1	4	up to 12	2	2	6	256	4 K
CY8C23x33	up to 26	1	4	up to 12	2	2	4	256	8 K
CY8C22x45	up to 38	2	8	up to 38	0	4	6[1]	1 K	16 K
CY8C21x45	up to 24	1	4	up to 24	0	4	6[1]	512	8 K
CY8C21x34	up to 28	1	4	up to 28	0	2	4[1]	512	8 K
CY8C21x23	up to 16	1	4	up to 8	0	2	4[1]	256	4 K
CY8C20x34	up to 28	0	0	up to 28	0	0	3[1, 2]	512	8 K
CY8C20xx6	up to 36	0	0	up to 36	0	0	3[1, 2]	up to 2 K	up to 32 K

Notes
1. Limited analog functionality.
2. Two analog blocks and one CapSense®.

Getting Started

For in depth information, along with detailed programming details, see the *PSoC® Technical Reference Manual*.

For up-to-date ordering, packaging, and electrical specification information, see the latest PSoC device datasheets on the web.

Application Notes

Cypress application notes are an excellent introduction to the wide variety of possible PSoC designs.

Development Kits

PSoC Development Kits are available online from and through a growing number of regional and global distributors, which include Arrow, Avnet, Digi-Key, Farnell, Future Electronics, and Newark.

Training

Free PSoC technical training (on demand, webinars, and workshops), which is available online via www.cypress.com, covers a wide variety of topics and skill levels to assist you in your designs.

CYPros Consultants

Certified PSoC Consultants offer everything from technical assistance to completed PSoC designs. To contact or become a PSoC Consultant go to the CYPros Consultants web site.

Solutions Library

Visit our growing library of solution focused designs. Here you can find various application designs that include firmware and hardware design files that enable you to complete your designs quickly.

Technical Support

Technical support – including a searchable Knowledge Base articles and technical forums – is also available online. If you cannot find an answer to your question, call our Technical Support hotline at 1-800-541-4736.

Development Tools

PSoC Designer™ is the revolutionary Integrated Design Environment (IDE) that you can use to customize PSoC to meet your specific application requirements. PSoC Designer software accelerates system design and time to market. Develop your applications using a library of precharacterized analog and digital peripherals (called user modules) in a drag-and-drop design environment. Then, customize your design by leveraging the dynamically generated application programming interface (API) libraries of code. Finally, debug and test your designs with the integrated debug environment, including in-circuit emulation and standard software debug features. PSoC Designer includes:

- Application editor graphical user interface (GUI) for device and user module configuration and dynamic reconfiguration
- Extensive user module catalog
- Integrated source-code editor (C and assembly)
- Free C compiler with no size restrictions or time limits
- Built-in debugger
- In-circuit emulation
- Built-in support for communication interfaces:
  - Hardware and software I^2C slaves and masters
  - Full-speed USB 2.0
  - Up to four full-duplex universal asynchronous receiver/transmitters (UARTs), SPI master and slave, and wireless

PSoC Designer supports the entire library of PSoC 1 devices and runs on Windows XP, Windows Vista, and Windows 7.

PSoC Designer Software Subsystems

Design Entry

In the chip-level view, choose a base device to work with. Then select different onboard analog and digital components that use the PSoC blocks, which are called user modules. Examples of user modules are analog-to-digital converters (ADCs), digital-to-analog converters (DACs), amplifiers, and filters. Configure the user modules for your chosen application and connect them to each other and to the proper pins. Then generate your project. This prepopulates your project with APIs and libraries that you can use to program your application.

The tool also supports easy development of multiple configurations and dynamic reconfiguration. Dynamic reconfiguration makes it possible to change configurations at run time. In essence, this lets you to use more than 100 percent of PSoC's resources for an application.

Code Generation Tools

The code generation tools work seamlessly within the PSoC Designer interface and have been tested with a full range of debugging tools. You can develop your design in C, assembly, or a combination of the two.

Assemblers. The assemblers allow you to merge assembly code seamlessly with C code. Link libraries automatically use absolute addressing or are compiled in relative mode, and linked with other software modules to get absolute addressing.

C Language Compilers. C language compilers are available that support the PSoC family of devices. The products allow you to create complete C programs for the PSoC family devices. The optimizing C compilers provide all of the features of C, tailored to the PSoC architecture. They come complete with embedded libraries providing port and bus operations, standard keypad and display support, and extended math functionality.

Debugger

PSoC Designer has a debug environment that provides hardware in-circuit emulation, allowing you to test the program in a physical system while providing an internal view of the PSoC device. Debugger commands allow you to read and program and read and write data memory, and read and write I/O registers. You can read and write CPU registers, set and clear breakpoints, and provide program run, halt, and step control. The debugger also lets you to create a trace buffer of registers and memory locations of interest.

Online Help System

The online help system displays online, context-sensitive help. Designed for procedural and quick reference, each functional subsystem has its own context-sensitive help. This system also provides tutorials and links to FAQs and an Online Support Forum to aid the designer.

In-Circuit Emulator

A low-cost, high-functionality In-Circuit Emulator (ICE) is available for development support. This hardware can program single devices.

The emulator consists of a base unit that connects to the PC using a USB port. The base unit is universal and operates with all PSoC devices. Emulation pods for each device family are available separately. The emulation pod takes the place of the PSoC device in the target board and performs full-speed (24-MHz) operation.

Designing with PSoC Designer

The development process for the PSoC device differs from that of a traditional fixed function microprocessor. The configurable analog and digital hardware blocks give the PSoC architecture a unique flexibility that pays dividends in managing specification change during development and by lowering inventory costs. These configurable resources, called PSoC Blocks, have the ability to implement a wide variety of user-selectable functions. The PSoC development process is summarized in four steps:

1. Select User Modules.
2. Configure user modules.
3. Organize and connect.
4. Generate, verify, and debug.

Select User Modules

PSoC Designer provides a library of prebuilt, pretested hardware peripheral components called “user modules.” User modules make selecting and implementing peripheral devices, both analog and digital, simple.

Configure User Modules

Each user module that you select establishes the basic register settings that implement the selected function. They also provide parameters and properties that allow you to tailor their precise configuration to your particular application. For example, a pulse width modulator (PWM) User Module configures one or more digital PSoC blocks, one for each 8 bits of resolution. The user module parameters permit you to establish the pulse width and duty cycle. Configure the parameters and properties to correspond to your chosen application. Enter values directly or by selecting values from drop-down menus. All the user modules are documented in datasheets that may be viewed directly in PSoC Designer or on the Cypress website. These user module datasheets explain the internal operation of the user module and provide performance specifications. Each datasheet describes the use of each user module parameter, and other information you may need to successfully implement your design.

Organize and Connect

You build signal chains at the chip level by interconnecting user modules to each other and the I/O pins. You perform the selection, configuration, and routing so that you have complete control over all on-chip resources.

Generate, Verify, and Debug

When you are ready to test the hardware configuration or move on to developing code for the project, you perform the “Generate Configuration Files” step. This causes PSoC Designer to generate source code that automatically configures the device to your specification and provides the software for the system. The generated code provides application programming interfaces (APIs) with high-level functions to control and respond to hardware events at run time and interrupt service routines that you can adapt as needed.

A complete code development environment lets you to develop and customize your applications in either C, assembly language, or both.

The last step in the development process takes place inside PSoC Designer’s debugger (access by clicking the Connect icon). PSoC Designer downloads the HEX image to the ICE where it runs at full speed. PSoC Designer debugging capabilities rival those of systems costing many times more. In addition to traditional single-step, run-to-breakpoint and watch-variable features, the debug interface provides a large trace buffer and lets you to define complex breakpoint events that include monitoring address and data bus values, memory locations and external signals.

Pinouts

The CY8C27x43 PSoC device is available in a variety of packages which are listed and illustrated in the following tables. Every port pin (labeled with a "P") is capable of Digital I/O. However, Vss, V_{DD}, SMP, and XRES are not capable of Digital I/O.

8-pin Part Pinout

Table 2. Pin Definitions – 8-pin PDIP

Pin No.	Type		Pin Name	Description
	Digital	Analog		
1	I/O	I/O	P0[5]	Analog column mux input and column output
2	I/O	I/O	P0[3]	Analog column mux input and column output
3	I/O		P1[1]	Crystal Input (XTALin), I^2C serial clock (SCL), ISSP-SCLK[3]
4	Power		Vss	Ground connection.
5	I/O		P1[0]	Crystal output (XTALout), I^2C serial data (SDA), ISSP-SDATA[3]
6	I/O	I/O	P0[2]	Analog column mux input and column output
7	I/O	I/O	P0[4]	Analog column mux input and column output
8	Power		V_{DD}	Supply voltage

LEGEND: A = Analog, I = Input, and O = Output.

Figure 3. CY8C27143 8-pin PSoC Device

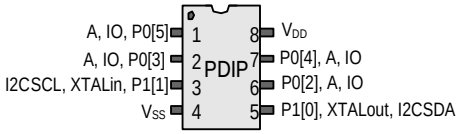

20-pin Part Pinout

Table 3. Pin Definitions – 20-pin SSOP, SOIC

Pin No.	Type		Pin Name	Description
	Digital	Analog		
1	I/O	I	P0[7]	Analog column mux input
2	I/O	I/O	P0[5]	Analog column mux input and column output
3	I/O	I/O	P0[3]	Analog column mux input and column output
4	I/O	I	P0[1]	Analog column mux input
5	Power		SMP	Switch Mode Pump (SMP) connection to external components required
6	I/O		P1[7]	I^2C Serial Clock (SCL)
7	I/O		P1[5]	I^2C Serial Data (SDA)
8	I/O		P1[3]	
9	I/O		P1[1]	Crystal input (XTALin), I^2C SCL, ISSP-SCLK[3]
10	Power		Vss	Ground connection.
11	I/O		P1[0]	Crystal output (XTALout), I^2C SDA, ISSP-SDATA[3]
12	I/O		P1[2]	
13	I/O		P1[4]	Optional external clock input (EXTCLK)
14	I/O		P1[6]	
15	Input		XRES	Active high external reset with internal pull down
16	I/O	I	P0[0]	Analog column mux input
17	I/O	I/O	P0[2]	Analog column mux input and column output
18	I/O	I/O	P0[4]	Analog column mux input and column output
19	I/O	I	P0[6]	Analog column mux input
20	Power		V_{DD}	Supply voltage

LEGEND: A = Analog, I = Input, and O = Output.

Figure 4. CY8C27243 20-pin PSoC Device

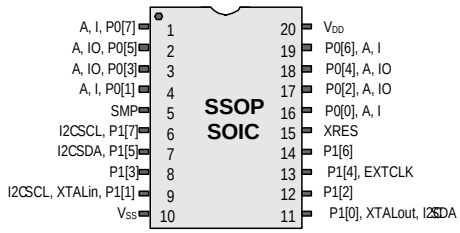

Note

3. These are the ISSP pins, which are not High Z at POR (Power On Reset). See the *PSoC Programmable System-on-Chip* Technical Reference Manual for details.

28-pin Part Pinout

Table 4. Pin Definitions – 28-pin PDIP, SSOP, SOIC

Pin No.	Type		Pin Name	Description
	Digital	Analog		
1	I/O	I	P0[7]	Analog column mux input
2	I/O	I/O	P0[5]	Analog column mux input and column output
3	I/O	I/O	P0[3]	Analog column mux input and column output
4	I/O	I	P0[1]	Analog column mux input
5	I/O		P2[7]	
6	I/O		P2[5]	
7	I/O	I	P2[3]	Direct switched capacitor block input
8	I/O	I	P2[1]	Direct switched capacitor block input
9	Power		SMP	Switch mode pump (SMP) connection to external components required
10	I/O		P1[7]	I^2C SCL
11	I/O		P1[5]	I^2C SDA
12	I/O		P1[3]	
13	I/O		P1[1]	Crystal input (XTALin), I^2C SCL, ISSP-SCLK[4]
14	Power		Vss	Ground connection.
15	I/O		P1[0]	Crystal output (XTALout), I^2C SDA, ISSP-SDATA[4]
16	I/O		P1[2]	
17	I/O		P1[4]	Optional external clock input (EXTCLK)
18	I/O		P1[6]	
19	Input		XRES	Active high external reset with internal pull down
20	I/O	I	P2[0]	Direct switched capacitor block input
21	I/O	I	P2[2]	Direct switched capacitor block input
22	I/O		P2[4]	External analog ground (AGND)
23	I/O		P2[6]	External voltage reference (V_{REF})
24	I/O	I	P0[0]	Analog column mux input
25	I/O	I/O	P0[2]	Analog column mux input and column output
26	I/O	I/O	P0[4]	Analog column mux input and column output
27	I/O	I	P0[6]	Analog column mux input
28	Power		V_{DD}	Supply voltage

LEGEND: A = Analog, I = Input, and O = Output.

Figure 5. CY8C27443 28-pin PSoC Device

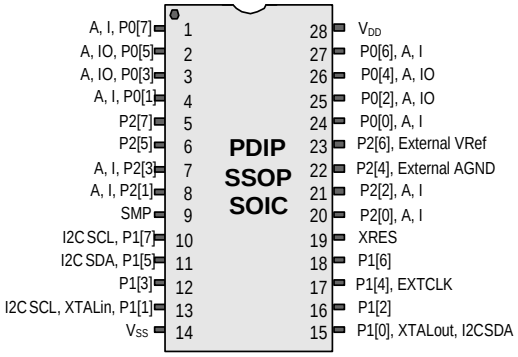

Note
4. These are the ISSP pins, which are not High Z at POR (Power On Reset). See the *PSoC Programmable System-on-Chip* Technical Reference Manual for details.

44-pin Part Pinout

Table 5. Pin Definitions – 44-pin TQFP

Pin No.	Type		Pin Name	Description
	Digital	Analog		
1	I/O		P2[5]	
2	I/O	I	P2[3]	Direct switched capacitor block input
3	I/O	I	P2[1]	Direct switched capacitor block input
4	I/O		P4[7]	
5	I/O		P4[5]	
6	I/O		P4[3]	
7	I/O		P4[1]	
8	Power		SMP	SMP connection to external components required
9	I/O		P3[7]	
10	I/O		P3[5]	
11	I/O		P3[3]	
12	I/O		P3[1]	
13	I/O		P1[7]	I^2C SCL
14	I/O		P1[5]	I^2C SDA
15	I/O		P1[3]	
16	I/O		P1[1]	Crystal input (XTALin), I^2C SCL, ISSP-SCLK[5]
17	Power		Vss	Ground connection.
18	I/O		P1[0]	Crystal output (XTALout), I^2C SDA, ISSP-SDATA[5]
19	I/O		P1[2]	
20	I/O		P1[4]	Optional external clock input (EXTCLK)
21	I/O		P1[6]	
22	I/O		P3[0]	
23	I/O		P3[2]	
24	I/O		P3[4]	
25	I/O		P3[6]	
26	Input		XRES	Active high external reset with internal pull down
27	I/O		P4[0]	
28	I/O		P4[2]	
29	I/O		P4[4]	
30	I/O		P4[6]	
31	I/O	I	P2[0]	Direct switched capacitor block input
32	I/O	I	P2[2]	Direct switched capacitor block input
33	I/O		P2[4]	External Analog Ground (AGND)
34	I/O		P2[6]	External Voltage Reference (VRef)
35	I/O	I	P0[0]	Analog column mux input
36	I/O	I/O	P0[2]	Analog column mux input and column output
37	I/O	I/O	P0[4]	Analog column mux input and column output
38	I/O	I	P0[6]	Analog column mux input
39	Power		V_{DD}	Supply voltage
40	I/O	I	P0[7]	Analog column mux input
41	I/O	I/O	P0[5]	Analog column mux input and column output
42	I/O	I/O	P0[3]	Analog column mux input and column output
43	I/O	I	P0[1]	Analog column mux input
44	I/O		P2[7]	

LEGEND: A = Analog, I = Input, and O = Output.

Figure 6. CY8C27543 44-pin PSoC Device

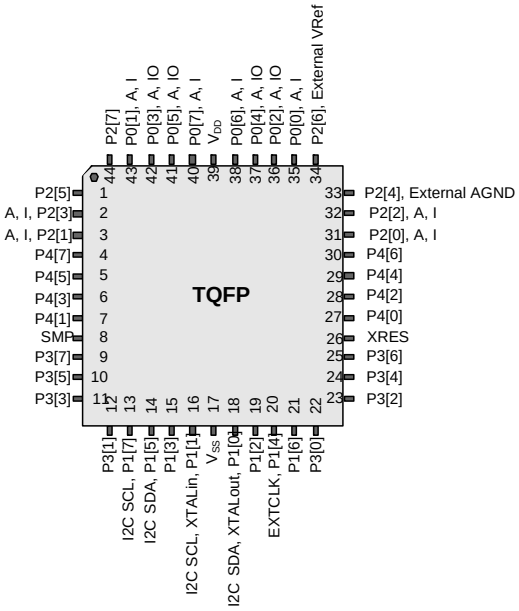

Note
5. These are the ISSP pins, which are not High Z at POR (Power On Reset). See the *PSoC Programmable System-on-Chip* Technical Reference Manual for details.

48-pin Part Pinout

Table 6. Pin Definitions – 48-pin Part Pinout (SSOP)

Pin No.	Type		Pin Name	Description
	Digital	Analog		
1	I/O	I	P0[7]	Analog column mux input
2	I/O	I/O	P0[5]	Analog column mux input and column output
3	I/O	I/O	P0[3]	Analog column mux input and column output
4	I/O	I	P0[1]	Analog column mux input
5	I/O		P2[7]	
6	I/O		P2[5]	
7	I/O	I	P2[3]	Direct switched capacitor block input
8	I/O	I	P2[1]	Direct switched capacitor block input
9	I/O		P4[7]	
10	I/O		P4[5]	
11	I/O		P4[3]	
12	I/O		P4[1]	
13	Power		SMP	SMP connection to external components required
14	I/O		P3[7]	
15	I/O		P3[5]	
16	I/O		P3[3]	
17	I/O		P3[1]	
18	I/O		P5[3]	
19	I/O		P5[1]	
20	I/O		P1[7]	I^2C SCL
21	I/O		P1[5]	I^2C SDA
22	I/O		P1[3]	
23	I/O		P1[1]	Crystal Input (XTALin), I^2C SCL, ISSP-SCLK[6]
24	Power		Vss	Ground connection
25	I/O		P1[0]	Crystal output (XTALout), I^2C SDA, ISSP-SDATA.[6]
26	I/O		P1[2]	
27	I/O		P1[4]	Optional external clock input (EXTCLK)
28	I/O		P1[6]	
29	I/O		P5[0]	
30	I/O		P5[2]	
31	I/O		P3[0]	
32	I/O		P3[2]	
33	I/O		P3[4]	
34	I/O		P3[6]	
35	Input		XRES	Active high external reset with internal pull down
36	I/O		P4[0]	
37	I/O		P4[2]	
38	I/O		P4[4]	
39	I/O		P4[6]	
40	I/O	I	P2[0]	Direct switched capacitor block input
41	I/O	I	P2[2]	Direct switched capacitor block input
42	I/O		P2[4]	External analog ground (AGND)
43	I/O		P2[6]	External voltage reference (VRef)
44	I/O	I	P0[0]	Analog column mux input
45	I/O	I/O	P0[2]	Analog column mux input and column output
46	I/O	I/O	P0[4]	Analog column mux input and column output
47	I/O	I	P0[6]	Analog column mux input
48	Power		V_{DD}	Supply voltage

LEGEND: A = Analog, I = Input, and O = Output.

Figure 7. CY8C27643 48-pin PSoC Device

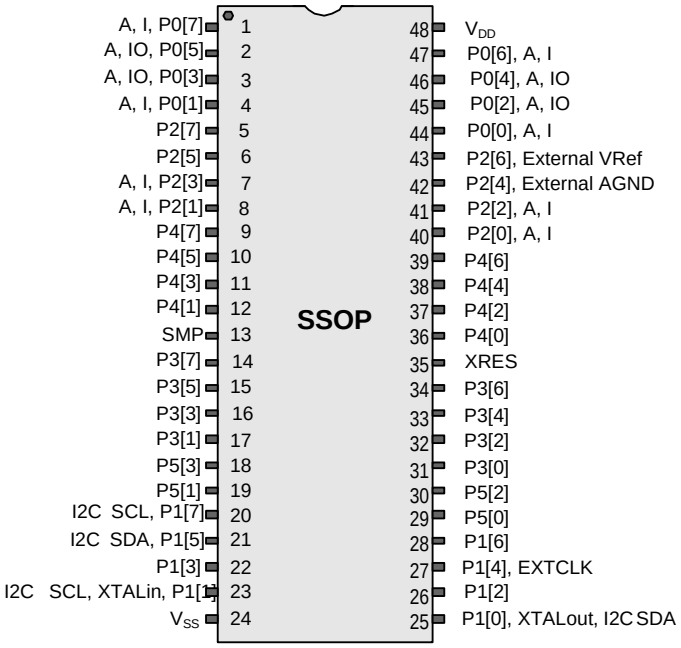

Note

6. These are the ISSP pins, which are not High Z at POR (Power On Reset). See the *PSoC Programmable System-on-Chip* Technical Reference Manual for details.

Table 7. Pin Definitions – 48-pin Part Pinout (QFN)

Pin No.	Type		Pin Name	Description
	Digital	Analog		
1	I/O	I	P2[3]	Direct switched capacitor block input
2	I/O	I	P2[1]	Direct switched capacitor block input
3	I/O		P4[7]	
4	I/O		P4[5]	
5	I/O		P4[3]	
6	I/O		P4[1]	
7	Power		SMP	SMP connection to external components required
8	I/O		P3[7]	
9	I/O		P3[5]	
10	I/O		P3[3]	
11	I/O		P3[1]	
12	I/O		P5[3]	
13	I/O		P5[1]	
14	I/O		P1[7]	I^2C SCL
15	I/O		P1[5]	I^2C SDA
16	I/O		P1[3]	
17	I/O		P1[1]	Crystal input (XTALin), I^2C SCL, ISSP-SCLK[8]
18	Power		Vss	Ground connection.
19	I/O		P1[0]	Crystal output (XTALout), I^2C SDA, ISSP-SDATA[8]
20	I/O		P1[2]	
21	I/O		P1[4]	Optional external clock input (EXTCLK)
22	I/O		P1[6]	
23	I/O		P5[0]	
24	I/O		P5[2]	
25	I/O		P3[0]	
26	I/O		P3[2]	
27	I/O		P3[4]	
28	I/O		P3[6]	
29	Input		XRES	Active high external reset with internal pull down
30	I/O		P4[0]	
31	I/O		P4[2]	
32	I/O		P4[4]	
33	I/O		P4[6]	
34	I/O	I	P2[0]	Direct switched capacitor block input
35	I/O	I	P2[2]	Direct switched capacitor block input
36	I/O		P2[4]	External analog ground (AGND)
37	I/O		P2[6]	External voltage reference (V_{REF})
38	I/O	I	P0[0]	Analog column mux input
39	I/O	I/O	P0[2]	Analog column mux input and column output
40	I/O	I/O	P0[4]	Analog column mux input and column output
41	I/O	I	P0[6]	Analog column mux input
42	Power		V_{DD}	Supply voltage
43	I/O	I	P0[7]	Analog column mux input
44	I/O	I/O	P0[5]	Analog column mux input and column output
45	I/O	I/O	P0[3]	Analog column mux input and column output
46	I/O	I	P0[1]	Analog column mux input
47	I/O		P2[7]	
48	I/O		P2[5]	

LEGEND: A = Analog, I = Input, and O = Output.

Figure 8. CY8C27643 48-pin PSoC Device[7]

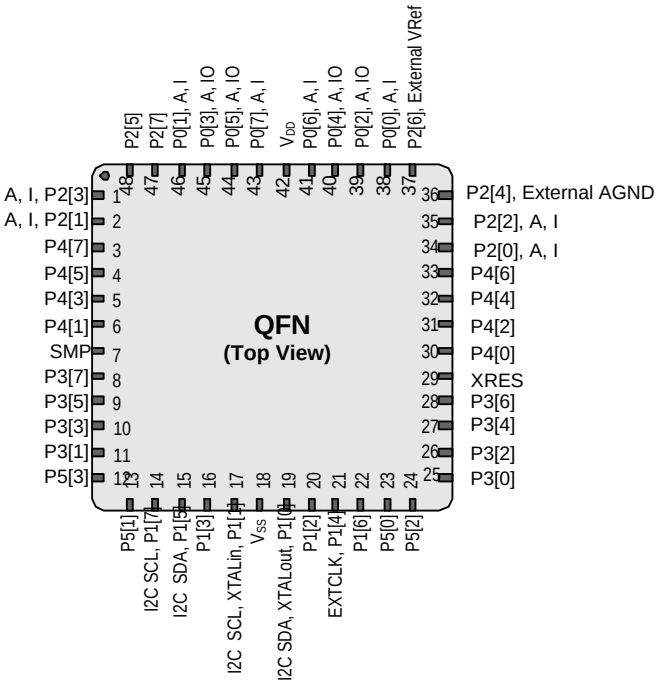

Notes
7. The QFN package has a center pad that must be connected to ground (Vss).
8. These are the ISSP pins, which are not High Z at POR (Power On Reset). See the *PSoC Technical Reference Manual* for details.

56-pin Part Pinout

The 56-pin SSOP part is for the CY8C27002 On-Chip Debug (OCD) PSoC device.

Note This part is only used for in-circuit debugging. It is NOT available for production.

Table 8. Pin Definitions – 56-pin Part Pinout (SSOP)

Pin No.	Type		Pin Name	Description
	Digital	Analog		
1			NC	No connection. Pin must be left floating
2	I/O	I	P0[7]	Analog column mux input
3	I/O	I	P0[5]	Analog column mux input and column output
4	I/O	I	P0[3]	Analog column mux input and column output
5	I/O	I	P0[1]	Analog column mux input
6	I/O		P2[7]	
7	I/O		P2[5]	
8	I/O	I	P2[3]	Direct switched capacitor block input
9	I/O	I	P2[1]	Direct switched capacitor block input
10	I/O		P4[7]	
11	I/O		P4[5]	
12	I/O	I	P4[3]	
13	I/O	I	P4[1]	
14	OCD		OCDE	OCD even data I/O
15	OCD		OCDO	OCD odd data output
16	Power		SMP	SMP connection to required external components
17	I/O		P3[7]	
18	I/O		P3[5]	
19	I/O		P3[3]	
20	I/O		P3[1]	
21	I/O		P5[3]	
22	I/O		P5[1]	
23	I/O		P1[7]	I^2C SCL
24	I/O		P1[5]	I^2C SDA
25			NC	No connection. Pin must be left floating
26	I/O		P1[3]	
27	I/O		P1[1]	Crystal Input (XTALin), I^2C SCL, ISSP-SCLK[9]
28	Power		V_{DD}	Supply voltage
29			NC	No connection. Pin must be left floating
30			NC	No connection. Pin must be left floating
31	I/O		P1[0]	Crystal output (XTALout), I^2C SDA, ISSP-SDATA[9]
32	I/O		P1[2]	
33	I/O		P1[4]	Optional external clock input (EXTCLK)
34	I/O		P1[6]	
35	I/O		P5[0]	
36	I/O		P5[2]	
37	I/O		P3[0]	
38	I/O		P3[2]	
39	I/O		P3[4]	
40	I/O		P3[6]	

Figure 9. CY8C27002 56-pin PSoC Device

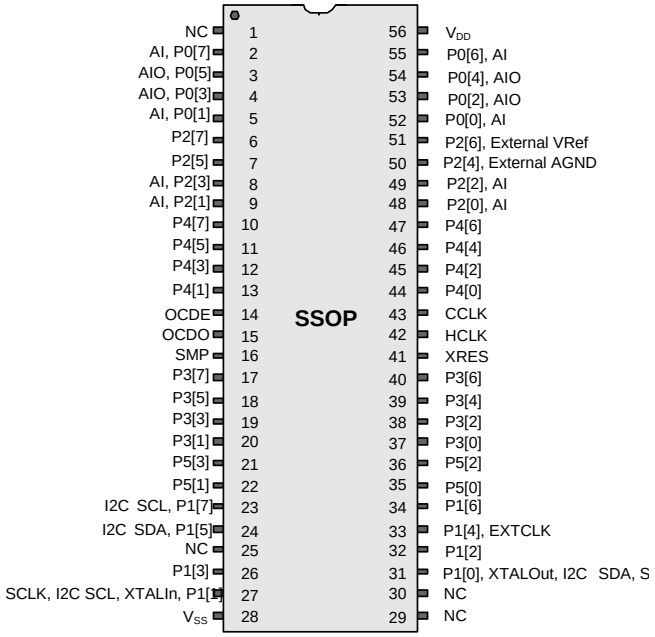

Not for Production

Note

9. These are the ISSP pins, which are not High Z at POR (Power On Reset). See the *PSoC Programmable System-on-Chip* Technical Reference Manual for details.

Table 8. Pin Definitions – 56-pin Part Pinout (SSOP) (continued)

Pin No.	Type		Pin Name	Description
	Digital	Analog		
42	OCD		HCLK	OCD high-speed clock output
43	OCD		CCLK	OCD CPU clock output
44	I/O		P4[0]	
45	I/O		P4[2]	
46	I/O		P4[4]	
47	I/O		P4[6]	
48	I/O	I	P2[0]	Direct switched capacitor block input
49	I/O	I	P2[2]	Direct switched capacitor block input
50	I/O		P2[4]	External Analog Ground (AGND)
51	I/O		P2[6]	External Voltage Reference (VRef)
52	I/O	I	P0[0]	Analog column mux input
53	I/O	I	P0[2]	Analog column mux input and column output
54	I/O	I	P0[4]	Analog column mux input and column output
55	I/O	I	P0[6]	Analog column mux input
56	Power		V_{DD}	Supply voltage

LEGEND: A = Analog, I = Input, O = Output, and OCD = On-Chip Debug.

Register Reference

This section lists the registers of the CY8C27x43 PSoC device. For detailed register information, see the PSoC Programmable System-on-Chip Technical Reference Manual.

Register Conventions

The register conventions specific to this section are listed in the following table.

Table 9. Register Conventions

Convention	Description
R	Read register or bit(s)
W	Write register or bit(s)
L	Logical register or bit(s)
C	Clearable register or bit(s)
#	Access is bit specific

Register Mapping Tables

The PSoC device has a total register address space of 512 bytes. The register space is referred to as I/O space and is divided into two banks. The XOI bit in the Flag register (CPU_F) determines which bank the user is currently in. When the XOI bit is set, the user is in Bank 1.

Note In the following register mapping tables, blank fields are reserved and must not be accessed.

Table 10. Register Map Bank 0 Table: User Space

Name	Addr (0,Hex)	Access	Name	Addr (0,Hex)	Access	Name	Addr (0,Hex)	Access	Name	Addr (0,Hex)	Access
PRT0DR	00	RW		40		ASC10CR0	80	RW		C0	
PRT0IE	01	RW		41		ASC10CR1	81	RW		C1	
PRT0GS	02	RW		42		ASC10CR2	82	RW		C2	
PRT0DM2	03	RW		43		ASC10CR3	83	RW		C3	
PRT1DR	04	RW		44		ASD11CR0	84	RW		C4	
PRT1IE	05	RW		45		ASD11CR1	85	RW		C5	
PRT1GS	06	RW		46		ASD11CR2	86	RW		C6	
PRT1DM2	07	RW		47		ASD11CR3	87	RW		C7	
PRT2DR	08	RW		48		ASC12CR0	88	RW		C8	
PRT2IE	09	RW		49		ASC12CR1	89	RW		C9	
PRT2GS	0A	RW		4A		ASC12CR2	8A	RW		CA	
PRT2DM2	0B	RW		4B		ASC12CR3	8B	RW		CB	
PRT3DR	0C	RW		4C		ASD13CR0	8C	RW		CC	
PRT3IE	0D	RW		4D		ASD13CR1	8D	RW		CD	
PRT3GS	0E	RW		4E		ASD13CR2	8E	RW		CE	
PRT3DM2	0F	RW		4F		ASD13CR3	8F	RW		CF	
PRT4DR	10	RW		50		ASD20CR0	90	RW		D0	
PRT4IE	11	RW		51		ASD20CR1	91	RW		D1	
PRT4GS	12	RW		52		ASD20CR2	92	RW		D2	
PRT4DM2	13	RW		53		ASD20CR3	93	RW		D3	
PRT5DR	14	RW		54		ASC21CR0	94	RW		D4	
PRT5IE	15	RW		55		ASC21CR1	95	RW		D5	
PRT5GS	16	RW		56		ASC21CR2	96	RW	I2C_CFG	D6	RW
PRT5DM2	17	RW		57		ASC21CR3	97	RW	I2C_SCR	D7	#
	18			58		ASD22CR0	98	RW	I2C_DR	D8	RW
	19			59		ASD22CR1	99	RW	I2C_MSCR	D9	#
	1A			5A		ASD22CR2	9A	RW	INT_CLR0	DA	RW
	1B			5B		ASD22CR3	9B	RW	INT_CLR1	DB	RW
	1C			5C		ASC23CR0	9C	RW		DC	
	1D			5D		ASC23CR1	9D	RW	INT_CLR3	DD	RW
	1E			5E		ASC23CR2	9E	RW	INT_MSK3	DE	RW
	1F			5F		ASC23CR3	9F	RW		DF	
DBB00DR0	20	#	AMX_IN	60	RW		A0		INT_MSK0	E0	RW
DBB00DR1	21	W		61			A1		INT_MSK1	E1	RW
DBB00DR2	22	RW		62			A2		INT_VC	E2	RC
DBB00CR0	23	#	ARF_CR	63	RW		A3		RES_WDT	E3	W
DBB01DR0	24	#	CMP_CR0	64	#		A4		DEC_DH	E4	RC
DBB01DR1	25	W	ASY_CR	65	#		A5		DEC_DL	E5	RC
DBB01DR2	26	RW	CMP_CR1	66	RW		A6		DEC_CR0	E6	RW

Blank fields are Reserved and must not be accessed. # Access is bit specific.

Table 10. Register Map Bank 0 Table: User Space (continued)

Name	Addr (0,Hex)	Access	Name	Addr (0,Hex)	Access	Name	Addr (0,Hex)	Access	Name	Addr (0,Hex)	Access
DBB01CR0	27	#		67			A7		DEC_CR1	E7	RW
DCB02DR0	28	#		68			A8		MUL_X	E8	W
DCB02DR1	29	W		69			A9		MUL_Y	E9	W
DCB02DR2	2A	RW		6A			AA		MUL_DH	EA	R
DCB02CR0	2B	#		6B			AB		MUL_DL	EB	R
DCB03DR0	2C	#		6C			AC		ACC_DR1	EC	RW
DCB03DR1	2D	W		6D			AD		ACC_DR0	ED	RW
DCB03DR2	2E	RW		6E			AE		ACC_DR3	EE	RW
DCB03CR0	2F	#		6F			AF		ACC_DR2	EF	RW
DBB10DR0	30	#	ACB00CR3	70	RW	RDI0RI	B0	RW		F0	
DBB10DR1	31	W	ACB00CR0	71	RW	RDI0SYN	B1	RW		F1	
DBB10DR2	32	RW	ACB00CR1	72	RW	RDI0IS	B2	RW		F2	
DBB10CR0	33	#	ACB00CR2	73	RW	RDI0LT0	B3	RW		F3	
DBB11DR0	34	#	ACB01CR3	74	RW	RDI0LT1	B4	RW		F4	
DBB11DR1	35	W	ACB01CR0	75	RW	RDI0RO0	B5	RW		F5	
DBB11DR2	36	RW	ACB01CR1	76	RW	RDI0RO1	B6	RW		F6	
DBB11CR0	37	#	ACB01CR2	77	RW		B7		CPU_F	F7	RL
DCB12DR0	38	#	ACB02CR3	78	RW	RDI1RI	B8	RW		F8	
DCB12DR1	39	W	ACB02CR0	79	RW	RDI1SYN	B9	RW		F9	
DCB12DR2	3A	RW	ACB02CR1	7A	RW	RDI1IS	BA	RW		FA	
DCB12CR0	3B	#	ACB02CR2	7B	RW	RDI1LT0	BB	RW		FB	
DCB13DR0	3C	#	ACB03CR3	7C	RW	RDI1LT1	BC	RW		FC	
DCB13DR1	3D	W	ACB03CR0	7D	RW	RDI1RO0	BD	RW		FD	
DCB13DR2	3E	RW	ACB03CR1	7E	RW	RDI1RO1	BE	RW	CPU_SCR1	FE	#
DCB13CR0	3F	#	ACB03CR2	7F	RW		BF		CPU_SCR0	FF	#

Blank fields are Reserved and must not be accessed. # Access is bit specific.

Table 11. Register Map Bank 1 Table: Configuration Space

Name	Addr (1,Hex)	Access	Name	Addr (1,Hex)	Access	Name	Addr (1,Hex)	Access	Name	Addr (1,Hex)	Access
PRT0DM0	00	RW		40		ASC10CR0	80	RW		C0	
PRT0DM1	01	RW		41		ASC10CR1	81	RW		C1	
PRT0IC0	02	RW		42		ASC10CR2	82	RW		C2	
PRT0IC1	03	RW		43		ASC10CR3	83	RW		C3	
PRT1DM0	04	RW		44		ASD11CR0	84	RW		C4	
PRT1DM1	05	RW		45		ASD11CR1	85	RW		C5	
PRT1IC0	06	RW		46		ASD11CR2	86	RW		C6	
PRT1IC1	07	RW		47		ASD11CR3	87	RW		C7	
PRT2DM0	08	RW		48		ASC12CR0	88	RW		C8	
PRT2DM1	09	RW		49		ASC12CR1	89	RW		C9	
PRT2IC0	0A	RW		4A		ASC12CR2	8A	RW		CA	
PRT2IC1	0B	RW		4B		ASC12CR3	8B	RW		CB	
PRT3DM0	0C	RW		4C		ASD13CR0	8C	RW		CC	
PRT3DM1	0D	RW		4D		ASD13CR1	8D	RW		CD	
PRT3IC0	0E	RW		4E		ASD13CR2	8E	RW		CE	
PRT3IC1	0F	RW		4F		ASD13CR3	8F	RW		CF	
PRT4DM0	10	RW		50		ASD20CR0	90	RW	GDI_O_IN	D0	RW
PRT4DM1	11	RW		51		ASD20CR1	91	RW	GDI_E_IN	D1	RW
PRT4IC0	12	RW		52		ASD20CR2	92	RW	GDI_O_OU	D2	RW
PRT4IC1	13	RW		53		ASD20CR3	93	RW	GDI_E_OU	D3	RW
PRT5DM0	14	RW		54		ASC21CR0	94	RW		D4	
PRT5DM1	15	RW		55		ASC21CR1	95	RW		D5	
PRT5IC0	16	RW		56		ASC21CR2	96	RW		D6	
PRT5IC1	17	RW		57		ASC21CR3	97	RW		D7	
	18			58		ASD22CR0	98	RW		D8	
	19			59		ASD22CR1	99	RW		D9	
	1A			5A		ASD22CR2	9A	RW		DA	
	1B			5B		ASD22CR3	9B	RW		DB	
	1C			5C		ASC23CR0	9C	RW		DC	

Blank fields are Reserved and must not be accessed. # Access is bit specific.

Table 11. Register Map Bank 1 Table: Configuration Space (continued)

Name	Addr (1,Hex)	Access	Name	Addr (1,Hex)	Access	Name	Addr (1,Hex)	Access	Name	Addr (1,Hex)	Access
	1D			5D		ASC23CR1	9D	RW	OSC_GO_EN	DD	RW
	1E			5E		ASC23CR2	9E	RW	OSC_CR4	DE	RW
	1F			5F		ASC23CR3	9F	RW	OSC_CR3	DF	RW
DBB00FN	20	RW	CLK_CR0	60	RW		A0		OSC_CR0	E0	RW
DBB00IN	21	RW	CLK_CR1	61	RW		A1		OSC_CR1	E1	RW
DBB00OU	22	RW	ABF_CR0	62	RW		A2		OSC_CR2	E2	RW
	23		AMD_CR0	63	RW		A3		VLT_CR	E3	RW
DBB01FN	24	RW		64			A4		VLT_CMP	E4	R
DBB01IN	25	RW		65			A5			E5	
DBB01OU	26	RW	AMD_CR1	66	RW		A6			E6	
	27		ALT_CR0	67	RW		A7			E7	
DCB02FN	28	RW	ALT_CR1	68	RW		A8		IMO_TR	E8	W
DCB02IN	29	RW	CLK_CR2	69	RW		A9		ILO_TR	E9	W
DCB02OU	2A	RW		6A			AA		BDG_TR	EA	RW
	2B			6B			AB		ECO_TR	EB	W
DCB03FN	2C	RW		6C			AC			EC	
DCB03IN	2D	RW		6D			AD			ED	
DCB03OU	2E	RW		6E			AE			EE	
	2F			6F			AF			EF	
DBB10FN	30	RW	ACB00CR3	70	RW	RDI0RI	B0	RW		F0	
DBB10IN	31	RW	ACB00CR0	71	RW	RDI0SYN	B1	RW		F1	
DBB10OU	32	RW	ACB00CR1	72	RW	RDI0IS	B2	RW		F2	
	33		ACB00CR2	73	RW	RDI0LT0	B3	RW		F3	
DBB11FN	34	RW	ACB01CR3	74	RW	RDI0LT1	B4	RW		F4	
DBB11IN	35	RW	ACB01CR0	75	RW	RDI0RO0	B5	RW		F5	
DBB11OU	36	RW	ACB01CR1	76	RW	RDI0RO1	B6	RW		F6	
	37		ACB01CR2	77	RW		B7		CPU_F	F7	RL
DCB12FN	38	RW	ACB02CR3	78	RW	RDI1RI	B8	RW		F8	
DCB12IN	39	RW	ACB02CR0	79	RW	RDI1SYN	B9	RW		F9	
DCB12OU	3A	RW	ACB02CR1	7A	RW	RDI1IS	BA	RW		FA	
	3B		ACB02CR2	7B	RW	RDI1LT0	BB	RW		FB	
DCB13FN	3C	RW	ACB03CR3	7C	RW	RDI1LT1	BC	RW		FC	
DCB13IN	3D	RW	ACB03CR0	7D	RW	RDI1RO0	BD	RW		FD	
DCB13OU	3E	RW	ACB03CR1	7E	RW	RDI1RO1	BE	RW	CPU_SCR1	FE	#
	3F		ACB03CR2	7F	RW		BF		CPU_SCR0	FF	#

Blank fields are Reserved and must not be accessed. # Access is bit specific.

Electrical Specifications

This section presents the DC and AC electrical specifications of the CY8C27x43 PSoC device. For the most up to date electrical specifications, confirm that you have the most recent datasheet by going to the web at http://www.cypress.com.

Specifications are valid for –40 °C ≤ T_A ≤ 85 °C and T_J ≤ 100 °C, except where noted. Specifications for devices running at greater than 12 MHz are valid for –40 °C ≤ T_A ≤ 70 °C and T_J ≤ 82 °C.

Figure 10. Voltage versus CPU Frequency

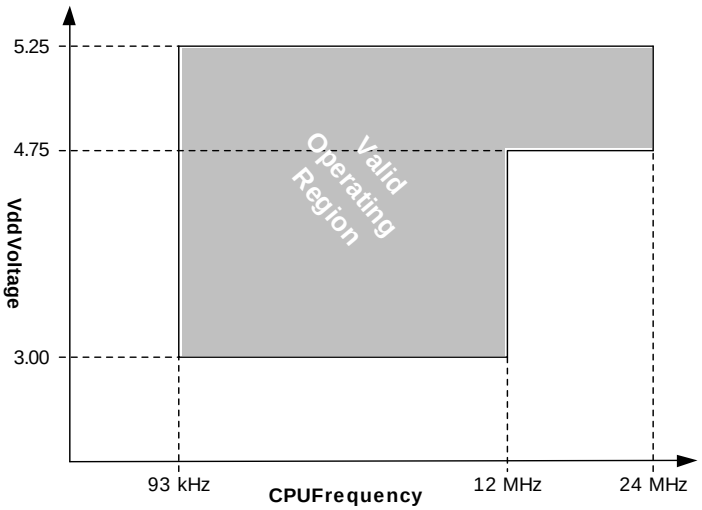

Absolute Maximum Ratings

Exceeding maximum ratings may shorten the useful life of the device. User guidelines are not tested.

Table 12. Absolute Maximum Ratings

Symbol	Description	Min	Typ	Max	Unit	Notes
T_{STG}	Storage temperature	–55	25	+100	°C	Higher storage temperatures reduce data retention time. Recommended storage temperature is +25 °C ± 25 °C. Extended duration storage temperatures above 65 °C degrade reliability.
$T_{BAKETEMP}$	Bake temperature	–	125	See package label	°C	
$t_{BAKETIME}$	Bake time	See package label	–	72	Hours	
T_A	Ambient temperature with power applied	–40	–	+85	°C	
V_{DD}	Supply voltage on V_{DD} relative to Vss	–0.5	–	+6.0	V	
V_{IO}	DC input voltage	Vss – 0.5	–	V_{DD} + 0.5	V	
V_{IOZ}	DC voltage applied to tristate	Vss – 0.5	–	V_{DD} + 0.5	V	
I_{MIO}	Maximum current into any port pin	–25	–	+50	mA	
I_{MAIO}	Maximum current into any port pin configured as analog driver	–50	–	+50	mA	
ESD	Electrostatic discharge voltage	2000	–	–	V	Human body model ESD.
LU	Latch-up current	–	–	200	mA	

Operating Temperature

Table 13. Operating Temperature

Symbol	Description	Min	Typ	Max	Unit	Notes
T_A	Ambient temperature	–40	–	+85	°C	
T_J	Junction temperature	–40	–	+100	°C	The temperature rise from ambient to junction is package specific. See Thermal Impedances on page 50. The user must limit the power consumption to comply with this requirement.

DC Electrical Characteristics

DC Chip-Level Specifications

Table 14 lists guaranteed maximum and minimum specifications for the voltage and temperature ranges: 4.75 V to 5.25 V and –40 °C ≤ T_A ≤ 85 °C, or 3.0 V to 3.6 V and –40 °C ≤ T_A ≤ 85 °C, respectively. Typical parameters apply to 5 V and 3.3 V at 25 °C and are for design guidance only.

Table 14. DC Chip-Level Specifications

Symbol	Description	Min	Typ	Max	Unit	Notes
V_{DD}	Supply voltage	3.00	–	5.25	V	
I_{DD}	Supply current	–	5	8	mA	Conditions are V_{DD} = 5.0 V, T_A = 25 °C, CPU = 3 MHz, SYSCLK doubler disabled. VC1 = 1.5 MHz, VC2 = 93.75 kHz, VC3 = 93.75 kHz.
I_{DD3}	Supply current	–	3.3	6.0	mA	Conditions are V_{DD} = 3.3 V, T_A = 25 °C, CPU = 3 MHz, SYSCLK doubler disabled. VC1 = 1.5 MHz, VC2 = 93.75 kHz, VC3 = 93.75 kHz.
I_{SB}	Sleep (Mode) current with POR, LVD, sleep timer, and WDT.[10]	–	3	6.5	µA	Conditions are with internal slow speed oscillator, V_{DD} = 3.3 V, –40 °C ≤ T_A ≤ 55 °C.
I_{SBH}	Sleep (Mode) current with POR, LVD, sleep timer, and WDT at high temperature.[10]	–	4	25	µA	Conditions are with internal slow speed oscillator, V_{DD} = 3.3 V, 55 °C < T_A ≤ 85 °C.
I_{SBXTL}	Sleep (Mode) current with POR, LVD, sleep timer, WDT, and external crystal.[10]	–	4	7.5	µA	Conditions are with properly loaded, 1 µW max, 32.768 kHz crystal. V_{DD} = 3.3 V, –40 °C ≤ T_A ≤ 55 °C.
I_{SBXTLH}	Sleep (Mode) current with POR, LVD, sleep timer, WDT, and external crystal at high temperature.[10]	–	5	26	µA	Conditions are with properly loaded, 1 µW max, 32.768 kHz crystal. V_{DD} = 3.3 V, 55 °C < T_A ≤ 85 °C.
V_{REF}	Reference voltage (Bandgap) for Silicon A [11]	1.275	1.300	1.325	V	Trimmed for appropriate V_{DD}.
V_{REF}	Reference voltage (Bandgap) for Silicon B [11]	1.280	1.300	1.320	V	Trimmed for appropriate V_{DD}.

Notes
10. Standby current includes all functions (POR, LVD, WDT, Sleep Time) needed for reliable system operation. This must be compared with devices that have similar functions enabled.
11. Refer to the Ordering Information on page 53.

DC GPIO Specifications

Table 15 lists guaranteed maximum and minimum specifications for the voltage and temperature ranges: 4.75 V to 5.25 V and –40 °C ≤ T_A ≤ 85 °C, or 3.0 V to 3.6 V and –40 °C ≤ T_A ≤ 85 °C, respectively. Typical parameters apply to 5 V and 3.3 V at 25 °C and are for design guidance only.

Table 15. DC GPIO Specifications

Symbol	Description	Min	Typ	Max	Unit	Notes
R_{PU}	Pull-up resistor	4	5.6	8	kΩ	
R_{PD}	Pull-down resistor	4	5.6	8	kΩ	
V_{OH}	High output level	V_{DD} – 1.0	–	–	V	I_{OH} = 10 mA, V_{DD} = 4.75 to 5.25 V (8 total loads, 4 on even port pins (for example, P0[2], P1[4]), 4 on odd port pins (for example, P0[3], P1[5])).
V_{OL}	Low output level	–	–	0.75	V	I_{OL} = 25 mA, V_{DD} = 4.75 to 5.25 V (8 total loads, 4 on even port pins (for example, P0[2], P1[4]), 4 on odd port pins (for example, P0[3], P1[5])).
I_{OH}	High-level source current	10	–	–	mA	V_{OH} = V_{DD} – 1.0 V, see the limitations of the total current in the note for V_{OH}
I_{OL}	Low-level sink current	25	–	–	mA	V_{OL} = 0.75 V, see the limitations of the total current in the note for V_{OL}
V_{IL}	Input low level	–	–	0.8	V	V_{DD} = 3.0 to 5.25
V_{IH}	Input high level	2.1	–		V	V_{DD} = 3.0 to 5.25
V_H	Input hysterisis	–	60	–	mV	
I_{IL}	Input leakage (absolute value)	–	1	–	nA	Gross tested to 1 µA.
C_{IN}	Capacitive load on pins as input	–	3.5	10	pF	Package and pin dependent. Temp = 25 °C.
C_{OUT}	Capacitive load on pins as output	–	3.5	10	pF	Package and pin dependent. Temp = 25 °C.

DC Operational Amplifier Specifications

Table 16 and Table 17 list guaranteed maximum and minimum specifications for the voltage and temperature ranges: 4.75 V to 5.25 V and –40 °C ≤ T_A ≤ 85 °C, or 3.0 V to 3.6 V and –40 °C ≤ T_A ≤ 85 °C, respectively. Typical parameters apply to 5 V and 3.3 V at 25 °C and are for design guidance only.

The operational amplifier is a component of both the analog continuous time PSoC blocks and the analog switched cap PSoC blocks. The guaranteed specifications are measured in the analog continuous time PSoC block. Typical parameters apply to 5 V at 25 °C and are for design guidance only.

Table 16. 5-V DC Operational Amplifier Specifications

Symbol	Description	Min	Typ	Max	Units	Notes
V_{OSOA}	Input offset voltage (absolute value) Power = low, Opamp bias = low Power = low, Opamp bias = high Power = medium, Opamp bias = low Power = medium, Opamp bias = high Power = high, Opamp bias = low Power = high, Opamp bias = high	 – – – – – –	 1.6 1.6 1.6 1.6 1.6 1.6	 10 10 10 10 10 10	 mV mV mV mV mV mV	
TCV_{OSOA}	Average input offset voltage drift	–	4	20	µV/°C	
I_{EBOA}	Input leakage current (port 0 analog pins)	–	20	–	pA	Gross tested to 1 µA.
C_{INOA}	Input capacitance (port 0 analog pins)	–	4.5	9.5	pF	Package and pin dependent. Temp = 25 °C
V_{CMOA}	Common mode voltage range	0	–	V_{DD}	V	The common-mode input voltage range is measured through an analog output buffer. The specification includes the limitations imposed by the characteristics of the analog output buffer.
	Common mode voltage range (high power or high Opamp bias)	0.5	–	V_{DD} – 0.5	V	

Table 16. 5-V DC Operational Amplifier Specifications

Symbol	Description	Min	Typ	Max	Units	Notes
$CMRR_{OA}$	Common mode rejection ratio Power = low, Opamp bias = high Power = medium, Opamp bias = high Power = high, Opamp bias = high	 60 60 60	 – – –	 – – –	 dB dB dB	Specification is applicable at both High and Low opamp bias.
G_{OLOA}	Open loop gain Power = low, Opamp bias = high Power = medium, Opamp bias = high Power = high, Opamp bias = high	 60 60 80	 – – –	 – – –	 dB dB dB	Specification is applicable at High opamp bias. For Low opamp bias mode, minimum is 60 dB.
$V_{OHIGHOA}$	High output voltage swing (internal signals) Power = low, Opamp bias = high Power = medium, Opamp bias = high Power = high, Opamp bias = high	 V_{DD} – 0.2 V_{DD} – 0.2 V_{DD} – 0.5	 – – –	 – – –	 V V V	
V_{OLOWOA}	Low output voltage swing (internal signals) Power = low, Opamp bias = high Power = medium, Opamp bias = high Power = high, Opamp bias = high	 – – –	 – – –	 0.2 0.2 0.5	 V V V	
I_{SOA}	Supply current (including associated AGND buffer) Power = low, Opamp bias = low Power = low, Opamp bias = high Power = medium, Opamp bias = low Power = medium, Opamp bias = high Power = high, Opamp bias = low Power = high, Opamp bias = high	 – – – – – –	 150 300 600 1200 2400 4600	 200 400 800 1600 3200 6400	 µA µA µA µA µA µA	
$PSRR_{OA}$	Supply voltage rejection ratio	60	–	–	dB	$Vss \le V_{IN} \le (V_{DD} – 2.25)$ or $(V_{DD} – 1.25\ V) \le V_{IN} \le V_{DD}$.

Table 17. 3.3-V DC Operational Amplifier Specifications

Symbol	Description	Min	Typ	Max	Unit	Notes
V_{OSOA}	Input offset voltage (absolute value) Power = low, Opamp bias = low Power = low, Opamp bias = high Power = medium, Opamp bias = low Power = medium, Opamp bias = high Power = high, Opamp bias = low Power = high, Opamp bias = high	 – – – – – –	 1.4 1.4 1.4 1.4 1.4 –	 10 10 10 10 10 –	 mV mV mV mV mV mV	Power = high, Opamp bias = high setting is not allowed for 3.3 V V_{DD} operation.
TCV_{OSOA}	Average input offset voltage drift	–	7	40	µV/°C	
I_{EBOA}	Input leakage current (port 0 analog pins)	–	20	–	pA	Gross tested to 1µA.
C_{INOA}	Input capacitance (port 0 analog pins)	–	4.5	9.5	pF	Package and pin dependent. Temp = 25 °C.
V_{CMOA}	Common mode voltage range	0.2	–	V_{DD} – 0.2	V	The common-mode input voltage range is measured through an analog output buffer. The specification includes the limitations imposed by the characteristics of the analog output buffer.
$CMRR_{OA}$	Common mode rejection ratio Power = low, Opamp bias = low Power = medium, Opamp bias = low Power = high, Opamp bias = low	 50 50 50	 – – –	 – – –	 dB dB dB	Specification is applicable at Low opamp bias. For High bias mode (except High Power, High opamp bias), minimum is 60 dB.
G_{OLOA}	Open loop gain Power = low, Opamp bias = low Power = medium, Opamp bias = low Power = high, Opamp bias = low	 60 60 80	 – – –	 – – –	 dB dB dB	Specification is applicable at Low opamp bias. For High opamp bias mode (except High Power, High opamp bias), minimum is 60 dB.

Table 17. 3.3-V DC Operational Amplifier Specifications (continued)

Symbol	Description	Min	Typ	Max	Unit	Notes
$V_{OHIGHOA}$	High output voltage swing (internal signals) Power = low, Opamp bias = low Power = medium, Opamp bias = low Power = high, Opamp bias = low	 V_{DD} – 0.2 V_{DD} – 0.2 V_{DD} – 0.2	 – – –	 – – –	 V V V	Power = high, Opamp bias = high setting is not allowed for 3.3 V V_{DD} operation.
V_{OLOWOA}	Low output voltage swing (internal signals) Power = low, Opamp bias = low Power = medium, Opamp bias = low Power = high, Opamp bias = low	 – – –	 – – –	 0.2 0.2 0.2	 V V V	Power = high, Opamp bias = high setting is not allowed for 3.3 V V_{DD} operation.
I_{SOA}	Supply current (including associated AGND buffer) Power = low, Opamp bias = low Power = low, Opamp bias = high Power = medium, Opamp bias = low Power = medium, Opamp bias = high Power = high, Opamp bias = low Power = high, Opamp bias = high	 – – – – – –	 150 300 600 1200 2400 –	 200 400 800 1600 3200 –	 µA µA µA µA µA µA	Power = high, Opamp bias = high setting is not allowed for 3.3 V V_{DD} operation.
$PSRR_{OA}$	Supply voltage rejection ratio	50	80	–	dB	$V_{SS} \le V_{IN} \le (V_{DD} – 2.25)$ or $(V_{DD} – 1.25\ V) \le V_{IN} \le V_{DD}$.

DC Low-Power Comparator Specifications

Table 18 lists guaranteed maximum and minimum specifications for the voltage and temperature ranges: 4.75 V to 5.25 V and –40 °C ≤ T_A ≤ 85 °C, 3.0 V to 3.6 V and –40 °C ≤ T_A ≤ 85 °C, or 2.4 V to 3.0 V and –40 °C ≤ T_A ≤ 85 °C, respectively. Typical parameters apply to 5 V at 25 °C and are for design guidance only.

Table 18. DC Low-Power Comparator Specifications

Symbol	Description	Min	Typ	Max	Unit
V_{REFLPC}	Low-power comparator (LPC) reference voltage range	0.2	–	V_{DD} – 1	V
I_{SLPC}	LPC supply current	–	10	40	µA
V_{OSLPC}	LPC voltage offset	–	2.5	30	mV

DC Analog Output Buffer Specifications

Table 19 and Table 20 on page 24 list guaranteed maximum and minimum specifications for the voltage and temperature ranges: 4.75 V to 5.25 V and –40 °C ≤ T_A ≤ 85 °C, or 3.0 V to 3.6 V and –40 °C ≤ T_A ≤ 85 °C, respectively. Typical parameters apply to 5 V and 3.3 V at 25 °C and are for design guidance only.

Table 19. 5-V DC Analog Output Buffer Specifications

Symbol	Description	Min	Typ	Max	Unit	Notes
V_{OSOB}	Input offset voltage (absolute value) Power = low, Opamp bias = low Power = low, Opamp bias = high Power = high, Opamp bias = low Power = high, Opamp bias = high	 – – – –	 3 3 3 3	 19 19 19 19	 mV mV mV mV	
TCV_{OSOB}	Average input offset voltage drift	–	5	30	µV/°C	
V_{CMOB}	Common-mode input voltage range	0.5	–	V_{DD} – 1.0	V	
R_{OUTOB}	Output resistance Power = low Power = high	 – –	 1 1	 – –	 Ω Ω	
$V_{OHIGHOB}$	High output voltage swing (Load = 32 ohms to $V_{DD}/2$) Power = low Power = high	 0.5 × V_{DD} + 1.3 0.5 × V_{DD} + 1.3	 – –	 – –	 V V	
V_{OLOWOB}	Low output voltage swing (Load = 32 ohms to $V_{DD}/2$)	–	–	–		
	Power = low	–	–	0.5 × V_{DD} – 1.3	V	
	Power = high	–	–	0.5 × V_{DD} – 1.3	V	

Table 19. 5-V DC Analog Output Buffer Specifications (continued)

Symbol	Description	Min	Typ	Max	Unit	Notes
I_{SOB}	Supply current including opamp bias cell (no load) Power = low Power = high	 –	 1.1	 5.1	 mA	
		–	2.6	8.8	mA	
$PSRR_{OB}$	Supply voltage rejection ratio	60	64	–	dB	
I_{OMAX}	Maximum output current	–	40	–	mA	
C_L	Load capacitance	–	–	200	pF	This specification applies to the external circuit driven by the analog output buffer.

Table 20. 3.3-V DC Analog Output Buffer Specifications

Symbol	Description	Min	Typ	Max	Unit	Notes
V_{OSOB}	Input offset voltage (absolute value) Power = low, Opamp bias = low Power = low, Opamp bias = high Power = high, Opamp bias = low Power = high, Opamp bias = high	 – – – –	 3.2 3.2 6 6	 20 20 25 25	 mV mV mV mV	High power setting is not recommended.
TCV_{OSOB}	Average input offset voltage drift Power = low, Opamp bias = low Power = low, Opamp bias = high Power = high, Opamp bias = low Power = high, Opamp bias = high	 – – – –	 9 9 12 12	 55 55 70 70	 µV/°C µV/°C µV/°C µV/°C	High power setting is not recommended.
V_{CMOB}	Common-mode input voltage range	0.5	–	V_{DD} – 1.0	V	
R_{OUTOB}	Output resistance Power = low Power = high	 – –	 1 1	 – –	 Ω Ω	
$V_{OHIGHOB}$	High output voltage swing (load = 32 ohms to $V_{DD}/2$) Power = low Power = high	 0.5 × V_{DD} + 1.0 0.5 × V_{DD} + 1.0	 – –	 – –	 V V	
V_{OLOWOB}	Low output voltage swing (load = 32 ohms to $V_{DD}/2$) Power = low Power = high	 – –	 – –	 0.5 × V_{DD} – 1.0 0.5 × V_{DD} – 1.0	 V V	
I_{SOB}	Supply current including opamp bias cell (no load) Power = low Power = high	 – –	 0.8 2.0	 2 4.3	 mA mA	
$PSRR_{OB}$	Supply voltage rejection ratio	60	64	–	dB	
C_L	Load capacitance	–	–	200	pF	This specification applies to the external circuit driven by the analog output buffer.

DC Switch Mode Pump Specifications

Table 21 lists guaranteed maximum and minimum specifications for the voltage and temperature ranges: 4.75 V to 5.25 V and –40 °C ≤ T_A ≤ 85 °C, or 3.0 V to 3.6 V and –40 °C ≤ T_A ≤ 85 °C, respectively. Typical parameters apply to 5 V and 3.3 V at 25 °C and are for design guidance only.

Table 21. DC Switch Mode Pump (SMP) Specifications

Symbol	Description	Min	Typ	Max	Unit	Notes
V_{PUMP} 5 V	5 V output voltage	4.75	5.0	5.25	V	Configured as in Note 12. Average, neglecting ripple. SMP trip voltage is set to 5.0 V.
V_{PUMP} 3 V	3 V output voltage	3.00	3.25	3.60	V	Configured as in Note 12. Average, neglecting ripple. SMP trip voltage is set to 3.25 V.
I_{PUMP}	Available output current V_{BAT} = 1.5 V, V_{PUMP} = 3.25 V V_{BAT} = 1.8 V, V_{PUMP} = 5.0 V	 8 5	 – –	 – –	 mA mA	Configured as in Note 12. SMP trip voltage is set to 3.25 V. SMP trip voltage is set to 5.0 V.
V_{BAT}5 V	Input voltage range from battery	1.8	–	5.0	V	Configured as in Note 12. SMP trip voltage is set to 5.0 V.
V_{BAT}3 V	Input voltage range from battery	1.0	–	3.3	V	Configured as in Note 12. SMP trip voltage is set to 3.25 V.
$V_{BATSTART}$	Minimum input voltage from battery to start pump	1.1	–	–	V	Configured as in Note 12.
ΔV_{PUMP_Line}	Line regulation (over V_{BAT} range)	–	5	–	$\%V_O$	Configured as in Note 12. V_O is the "V_{DD} Value for PUMP Trip" specified by the VM[2:0] setting in the DC POR and LVD Specification, Table 25 on page 33.
ΔV_{PUMP_Load}	Load regulation	–	5	–	$\%V_O$	Configured as in Note 12. V_O is the "V_{DD} Value for PUMP Trip" specified by the VM[2:0] setting in the DC POR and LVD Specification, Table 25 on page 33.
ΔV_{PUMP_Ripple}	Output voltage ripple (depends on capacitor/load)	–	100	–	mVpp	Configured as in Note 12. Load is 5 mA.
E_3	Efficiency	35	50	–	%	Configured as in Note 12. Load is 5 mA. SMP trip voltage is set to 3.25 V.
F_{PUMP}	Switching frequency	–	1.3	–	MHz	
DC_{PUMP}	Switching duty cycle	–	50	–	%	

Figure 11. Basic Switch Mode Pump Circuit

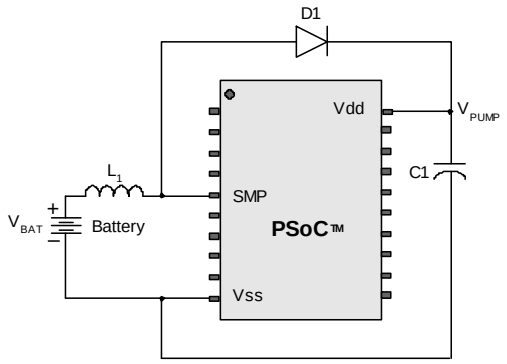

Note
12. L_1 = 2 mH inductor, C_1 = 10 mF capacitor, D_1 = Schottky diode. See Figure 11.

DC Analog Reference Specifications

The following tables list guaranteed maximum and minimum specifications for the voltage and temperature ranges: 4.75 V to 5.25 V and –40 °C ≤ T_A ≤ 85°C, or 3.0 V to 3.6 V and –40 °C ≤ T_A ≤ 85 °C, respectively. Typical parameters apply to 5 V and 3.3 V at 25 °C and are for design guidance only.

The guaranteed specifications are measured through the Analog Continuous Time PSoC blocks. The power levels for AGND refer to the power of the analog continuous time PSoC block. The power levels for RefHi and RefLo refer to the Analog Reference Control register. The limits stated for AGND include the offset error of the AGND buffer local to the Analog Continuous Time PSoC block. Reference control power is high.

Note Avoid using P2[4] for digital signaling when using an analog resource that depends on the Analog Reference. Some coupling of the digital signal may appear on the AGND.

Table 22. 5-V DC Analog Reference Specifications

Reference ARF_CR [5:3]	Reference Power Settings	Symbol	Reference	Description	Min	Typ	Max	Unit
0b000	RefPower = high Opamp bias = high	V_{REFHI}	Ref High	V_{DD}/2 + Bandgap	V_{DD}/2 + 1.228	V_{DD}/2 + 1.290	V_{DD}/2 + 1.352	V
		V_{AGND}	AGND	V_{DD}/2	V_{DD}/2 – 0.078	V_{DD}/2 – 0.007	V_{DD}/2 + 0.063	V
		V_{REFLO}	Ref Low	V_{DD}/2 – Bandgap	V_{DD}/2 – 1.336	V_{DD}/2 – 1.295	V_{DD}/2 – 1.250	V
	RefPower = high Opamp bias = low	V_{REFHI}	Ref High	V_{DD}/2 + Bandgap	V_{DD}/2 + 1.224	V_{DD}/2 + 1.293	V_{DD}/2 + 1.356	V
		V_{AGND}	AGND	V_{DD}/2	V_{DD}/2 – 0.056	V_{DD}/2 – 0.005	V_{DD}/2 + 0.043	V
		V_{REFLO}	Ref Low	V_{DD}/2 – Bandgap	V_{DD}/2 – 1.338	V_{DD}/2 – 1.298	V_{DD}/2 – 1.255	V
	RefPower = medium Opamp bias = high	V_{REFHI}	Ref High	V_{DD}/2 + Bandgap	V_{DD}/2 + 1.226	V_{DD}/2 + 1.293	V_{DD}/2 + 1.356	V
		V_{AGND}	AGND	V_{DD}/2	V_{DD}/2 – 0.057	V_{DD}/2 – 0.006	V_{DD}/2 + 0.044	V
		V_{REFLO}	Ref Low	V_{DD}/2 – Bandgap	V_{DD}/2 – 1.337	V_{DD}/2 – 1.298	V_{DD}/2 – 1.256	V
	RefPower = medium Opamp bias = low	V_{REFHI}	Ref High	V_{DD}/2 + Bandgap	V_{DD}/2 + 1.226	V_{DD}/2 + 1.294	V_{DD}/2 + 1.359	V
		V_{AGND}	AGND	V_{DD}/2	V_{DD}/2 – 0.047	V_{DD}/2 – 0.004	V_{DD}/2 + 0.035	V
		V_{REFLO}	Ref Low	V_{DD}/2 – Bandgap	V_{DD}/2 – 1.338	V_{DD}/2 – 1.299	V_{DD}/2 – 1.258	V

Note
13. AGND tolerance includes the offsets of the local buffer in the PSoC block.

Table 22. 5-V DC Analog Reference Specifications (continued)

Reference ARF_CR [5:3]	Reference Power Settings	Symbol	Reference	Description	Min	Typ	Max	Unit
0b001	RefPower = high Opamp bias = high	V_{REFHI}	Ref High	P2[4] + P2[6] (P2[4] = V_{DD}/2, P2[6] = 1.3 V)	P2[4] + P2[6] – 0.085	P2[4] + P2[6] – 0.016	P2[4] + P2[6] + 0.044	V
		V_{AGND}	AGND	P2[4]	P2[4]	P2[4]	P2[4]	–
		V_{REFLO}	Ref Low	P2[4] – P2[6] (P2[4] = V_{DD}/2, P2[6] = 1.3 V)	P2[4] – P2[6] – 0.022	P2[4] – P2[6] + 0.010	P2[4] – P2[6] + 0.055	V
	RefPower = high Opamp bias = low	V_{REFHI}	Ref High	P2[4] + P2[6] (P2[4] = V_{DD}/2, P2[6] = 1.3 V)	P2[4] + P2[6] – 0.077	P2[4] + P2[6] – 0.010	P2[4] + P2[6] + 0.051	V
		V_{AGND}	AGND	P2[4]	P2[4]	P2[4]	P2[4]	–
		V_{REFLO}	Ref Low	P2[4] – P2[6] (P2[4] = V_{DD}/2, P2[6] = 1.3 V)	P2[4] – P2[6] – 0.022	P2[4] – P2[6] + 0.005	P2[4] – P2[6] + 0.039	V
	RefPower = medium Opamp bias = high	V_{REFHI}	Ref High	P2[4] + P2[6] (P2[4] = V_{DD}/2, P2[6] = 1.3 V)	P2[4] + P2[6] – 0.070	P2[4] + P2[6] – 0.010	P2[4] + P2[6] + 0.050	V
		V_{AGND}	AGND	P2[4]	P2[4]	P2[4]	P2[4]	–
		V_{REFLO}	Ref Low	P2[4] – P2[6] (P2[4] = V_{DD}/2, P2[6] = 1.3 V)	P2[4] – P2[6] – 0.022	P2[4] – P2[6] + 0.005	P2[4] – P2[6] + 0.039	V
	RefPower = medium Opamp bias = low	V_{REFHI}	Ref High	P2[4] + P2[6] (P2[4] = V_{DD}/2, P2[6] = 1.3 V)	P2[4] + P2[6] – 0.070	P2[4] + P2[6] – 0.007	P2[4] + P2[6] + 0.054	V
		V_{AGND}	AGND	P2[4]	P2[4]	P2[4]	P2[4]	–
		V_{REFLO}	Ref Low	P2[4] – P2[6] (P2[4] = V_{DD}/2, P2[6] = 1.3 V)	P2[4] – P2[6] – 0.022	P2[4] – P2[6] + 0.002	P2[4] – P2[6] + 0.032	V
0b010	RefPower = high Opamp bias = high	V_{REFHI}	Ref High	V_{DD}	V_{DD} – 0.037	V_{DD} – 0.009	V_{DD}	V
		V_{AGND}	AGND	V_{DD}/2	V_{DD}/2 – 0.061	V_{DD}/2 – 0.006	V_{DD}/2 + 0.047	V
		V_{REFLO}	Ref Low	V_{SS}	V_{SS}	V_{SS} + 0.007	V_{SS} + 0.028	V
	RefPower = high Opamp bias = low	V_{REFHI}	Ref High	V_{DD}	V_{DD} – 0.039	V_{DD} – 0.006	V_{DD}	V
		V_{AGND}	AGND	V_{DD}/2	V_{DD}/2 – 0.049	V_{DD}/2 – 0.005	V_{DD}/2 + 0.036	V
		V_{REFLO}	Ref Low	V_{SS}	V_{SS}	V_{SS} + 0.005	V_{SS} + 0.019	V
	RefPower = medium Opamp bias = high	V_{REFHI}	Ref High	V_{DD}	V_{DD} – 0.037	V_{DD} – 0.007	V_{DD}	V
		V_{AGND}	AGND	V_{DD}/2	V_{DD}/2 – 0.054	V_{DD}/2 – 0.005	V_{DD}/2 + 0.041	V
		V_{REFLO}	Ref Low	V_{SS}	V_{SS}	V_{SS} + 0.006	V_{SS} + 0.024	V
	RefPower = medium Opamp bias = low	V_{REFHI}	Ref High	V_{DD}	V_{DD} – 0.042	V_{DD} – 0.005	V_{DD}	V
		V_{AGND}	AGND	V_{DD}/2	V_{DD}/2 – 0.046	V_{DD}/2 – 0.004	V_{DD}/2 + 0.034	V
		V_{REFLO}	Ref Low	V_{SS}	V_{SS}	V_{SS} + 0.004	V_{SS} + 0.017	V

Table 22. 5-V DC Analog Reference Specifications (continued)

Reference ARF_CR [5:3]	Reference Power Settings	Symbol	Reference	Description	Min	Typ	Max	Unit
0b011	RefPower = high Opamp bias = high	V_{REFHI}	Ref High	3 × Bandgap	3.788	3.891	3.986	V
		V_{AGND}	AGND	2 × Bandgap	2.500	2.604	3.699	V
		V_{REFLO}	Ref Low	Bandgap	1.257	1.306	1.359	V
	RefPower = high Opamp bias = low	V_{REFHI}	Ref High	3 × Bandgap	3.792	3.893	3.982	V
		V_{AGND}	AGND	2 × Bandgap	2.518	2.602	2.692	V
		V_{REFLO}	Ref Low	Bandgap	1.256	1.302	1.354	V
	RefPower = medium Opamp bias = high	V_{REFHI}	Ref High	3 × Bandgap	3.795	3.894	3.993	V
		V_{AGND}	AGND	2 × Bandgap	2.516	2.603	2.698	V
		V_{REFLO}	Ref Low	Bandgap	1.256	1.303	1.353	V
	RefPower = medium Opamp bias = low	V_{REFHI}	Ref High	3 × Bandgap	3.792	3.895	3.986	V
		V_{AGND}	AGND	2 × Bandgap	2.522	2.602	2.685	V
		V_{REFLO}	Ref Low	Bandgap	1.255	1.301	1.350	V
0b100	RefPower = high Opamp bias = high	V_{REFHI}	Ref High	2 × Bandgap + P2[6] (P2[6] = 1.3 V)	2.495 – P2[6]	2.586 – P2[6]	2.657 – P2[6]	V
		V_{AGND}	AGND	2 × Bandgap	2.502	2.604	2.719	V
		V_{REFLO}	Ref Low	2 × Bandgap – P2[6] (P2[6] = 1.3 V)	2.531 – P2[6]	2.611 – P2[6]	2.681 – P2[6]	V
	RefPower = high Opamp bias = low	V_{REFHI}	Ref High	2 × Bandgap + P2[6] (P2[6] = 1.3 V)	2.500 – P2[6]	2.591 – P2[6]	2.662 – P2[6]	V
		V_{AGND}	AGND	2 × Bandgap	2.519	2.602	2.693	V
		V_{REFLO}	Ref Low	2 × Bandgap – P2[6] (P2[6] = 1.3 V)	2.530 – P2[6]	2.605 – P2[6]	2.666 – P2[6]	V
	RefPower = medium Opamp bias = high	V_{REFHI}	Ref High	2 × Bandgap + P2[6] (P2[6] = 1.3 V)	2.503 – P2[6]	2.592 – P2[6]	2.662 – P2[6]	V
		V_{AGND}	AGND	2 × Bandgap	2.517	2.603	2.698	V
		V_{REFLO}	Ref Low	2 × Bandgap – P2[6] (P2[6] = 1.3 V)	2.529 – P2[6]	2.606 – P2[6]	2.665 – P2[6]	V
	RefPower = medium Opamp bias = low	V_{REFHI}	Ref High	2 × Bandgap + P2[6] (P2[6] = 1.3 V)	2.505 – P2[6]	2.594 – P2[6]	2.665 – P2[6]	V
		V_{AGND}	AGND	2 × Bandgap	2.525	2.602	2.685	V
		V_{REFLO}	Ref Low	2 × Bandgap – P2[6] (P2[6] = 1.3 V)	2.528 – P2[6]	2.603 – P2[6]	2.661 – P2[6]	V

Table 22. 5-V DC Analog Reference Specifications (continued)

Reference ARF_CR [5:3]	Reference Power Settings	Symbol	Reference	Description	Min	Typ	Max	Unit
0b101	RefPower = high Opamp bias = high	V_{REFHI}	Ref High	P2[4] + Bandgap ($P2[4] = V_{DD}/2$)	P2[4] + 1.222	P2[4] + 1.290	P2[4] + 1.343	V
		V_{AGND}	AGND	P2[4]	P2[4]	P2[4]	P2[4]	–
		V_{REFLO}	Ref Low	P2[4] – Bandgap ($P2[4] = V_{DD}/2$)	P2[4] – 1.331	P2[4] – 1.295	P2[4] – 1.254	V
	RefPower = high Opamp bias = low	V_{REFHI}	Ref High	P2[4] + Bandgap ($P2[4] = V_{DD}/2$)	P2[4] + 1.226	P2[4] + 1.293	P2[4] + 1.347	V
		V_{AGND}	AGND	P2[4]	P2[4]	P2[4]	P2[4]	–
		V_{REFLO}	Ref Low	P2[4] – Bandgap ($P2[4] = V_{DD}/2$)	P2[4] – 1.331	P2[4] – 1.298	P2[4] – 1.259	V
	RefPower = medium Opamp bias = high	V_{REFHI}	Ref High	P2[4] + Bandgap ($P2[4] = V_{DD}/2$)	P2[4] + 1.227	P2[4] + 1.294	P2[4] + 1.347	V
		V_{AGND}	AGND	P2[4]	P2[4]	P2[4]	P2[4]	–
		V_{REFLO}	Ref Low	P2[4] – Bandgap ($P2[4] = V_{DD}/2$)	P2[4] – 1.331	P2[4] – 1.298	P2[4] – 1.259	V
	RefPower = medium Opamp bias = low	V_{REFHI}	Ref High	P2[4] + Bandgap ($P2[4] = V_{DD}/2$)	P2[4] + 1.228	P2[4] + 1.295	P2[4] + 1.349	V
		V_{AGND}	AGND	P2[4]	P2[4]	P2[4]	P2[4]	–
		V_{REFLO}	Ref Low	P2[4] – Bandgap ($P2[4] = V_{DD}/2$)	P2[4] – 1.332	P2[4] – 1.299	P2[4] – 1.260	V
0b110	RefPower = high Opamp bias = high	V_{REFHI}	Ref High	2 × Bandgap	2.535	2.598	2.644	V
		V_{AGND}	AGND	Bandgap	1.227	1.305	1.398	V
		V_{REFLO}	Ref Low	V_{SS}	V_{SS}	V_{SS} + 0.009	V_{SS} + 0.038	V
	RefPower = high Opamp bias = low	V_{REFHI}	Ref High	2 × Bandgap	2.530	2.598	2.643	V
		V_{AGND}	AGND	Bandgap	1.244	1.303	1.370	V
		V_{REFLO}	Ref Low	V_{SS}	V_{SS}	V_{SS} + 0.005	V_{SS} + 0.024	V
	RefPower = medium Opamp bias = high	V_{REFHI}	Ref High	2 × Bandgap	2.532	2.598	2.644	V
		V_{AGND}	AGND	Bandgap	1.239	1.304	1.380	V
		V_{REFLO}	Ref Low	V_{SS}	V_{SS}	V_{SS} + 0.006	V_{SS} + 0.026	V
	RefPower = medium Opamp bias = low	V_{REFHI}	Ref High	2 × Bandgap	2.528	2.598	2.645	V
		V_{AGND}	AGND	Bandgap	1.249	1.302	1.362	V
		V_{REFLO}	Ref Low	V_{SS}	V_{SS}	V_{SS} + 0.004	V_{SS} + 0.018	V
0b111	RefPower = high Opamp bias = high	V_{REFHI}	Ref High	3.2 × Bandgap	4.041	4.155	4.234	V
		V_{AGND}	AGND	1.6 × Bandgap	1.998	2.083	2.183	V
		V_{REFLO}	Ref Low	V_{SS}	V_{SS}	V_{SS} + 0.010	V_{SS} + 0.038	V
	RefPower = high Opamp bias = low	V_{REFHI}	Ref High	3.2 × Bandgap	4.047	4.153	4.236	V
		V_{AGND}	AGND	1.6 × Bandgap	2.012	2.082	2.157	V
		V_{REFLO}	Ref Low	V_{SS}	V_{SS}	V_{SS} + 0.006	V_{SS} + 0.024	V
	RefPower = medium Opamp bias = high	V_{REFHI}	Ref High	3.2 × Bandgap	4.049	4.154	4.238	V
		V_{AGND}	AGND	1.6 × Bandgap	2.008	2.083	2.165	V
		V_{REFLO}	Ref Low	V_{SS}	V_{SS}	V_{SS} + 0.006	V_{SS} + 0.026	V
	RefPower = medium Opamp bias = low	V_{REFHI}	Ref High	3.2 × Bandgap	4.047	4.154	4.238	V
		V_{AGND}	AGND	1.6 × Bandgap	2.016	2.081	2.150	V
		V_{REFLO}	Ref Low	V_{SS}	V_{SS}	V_{SS} + 0.004	V_{SS} + 0.018	V

Table 23. 3.3-V DC Analog Reference Specifications

Reference ARF_CR [5:3]	Reference Power Settings	Symbol	Reference	Description	Min	Typ	Max	Unit
0b000	RefPower = high Opamp bias = high	V_{REFHI}	Ref High	$V_{DD}/2$ + Bandgap	$V_{DD}/2$ + 1.225	$V_{DD}/2$ + 1.292	$V_{DD}/2$ + 1.361	V
		V_{AGND}	AGND	$V_{DD}/2$	$V_{DD}/2$ – 0.067	$V_{DD}/2$ – 0.002	$V_{DD}/2$ + 0.063	V
		V_{REFLO}	Ref Low	$V_{DD}/2$ – Bandgap	$V_{DD}/2$ – 1.35	$V_{DD}/2$ – 1.293	$V_{DD}/2$ – 1.210	V
	RefPower = high Opamp bias = low	V_{REFHI}	Ref High	$V_{DD}/2$ + Bandgap	$V_{DD}/2$ + 1.218	$V_{DD}/2$ + 1.294	$V_{DD}/2$ + 1.370	V
		V_{AGND}	AGND	$V_{DD}/2$	$V_{DD}/2$ – 0.038	$V_{DD}/2$ – 0.001	$V_{DD}/2$ + 0.035	V
		V_{REFLO}	Ref Low	$V_{DD}/2$ – Bandgap	$V_{DD}/2$ – 1.329	$V_{DD}/2$ – 1.296	$V_{DD}/2$ – 1.259	V
	RefPower = medium Opamp bias = high	V_{REFHI}	Ref High	$V_{DD}/2$ + Bandgap	$V_{DD}/2$ + 1.221	$V_{DD}/2$ + 1.294	$V_{DD}/2$ + 1.366	V
		V_{AGND}	AGND	$V_{DD}/2$	$V_{DD}/2$ – 0.050	$V_{DD}/2$ – 0.002	$V_{DD}/2$ + 0.046	V
		V_{REFLO}	Ref Low	$V_{DD}/2$ – Bandgap	$V_{DD}/2$ – 1.331	$V_{DD}/2$ – 1.296	$V_{DD}/2$ – 1.260	V
	RefPower = medium Opamp bias = low	V_{REFHI}	Ref High	$V_{DD}/2$ + Bandgap	$V_{DD}/2$ + 1.226	$V_{DD}/2$ + 1.295	$V_{DD}/2$ + 1.365	V
		V_{AGND}	AGND	$V_{DD}/2$	$V_{DD}/2$ – 0.028	$V_{DD}/2$ – 0.001	$V_{DD}/2$ + 0.025	V
		V_{REFLO}	Ref Low	$V_{DD}/2$ – Bandgap	$V_{DD}/2$ – 1.329	$V_{DD}/2$ – 1.297	$V_{DD}/2$ – 1.262	V
0b001	RefPower = high Opamp bias = high	V_{REFHI}	Ref High	P2[4]+P2[6] (P2[4] = $V_{DD}/2$, P2[6] = 0.5 V)	P2[4] + P2[6] – 0.098	P2[4] + P2[6] – 0.018	P2[4] + P2[6] + 0.055	V
		V_{AGND}	AGND	P2[4]	P2[4]	P2[4]	P2[4]	–
		V_{REFLO}	Ref Low	P2[4] – P2[6] (P2[4] = $V_{DD}/2$, P2[6] = 0.5 V)	P2[4] – P2[6] – 0.055	P2[4] – P2[6] + 0.013	P2[4] – P2[6] + 0.086	V
	RefPower = high Opamp bias = low	V_{REFHI}	Ref High	P2[4] + P2[6] (P2[4] = $V_{DD}/2$, P2[6] = 0.5 V)	P2[4] + P2[6] – 0.082	P2[4] + P2[6] – 0.011	P2[4] + P2[6] + 0.050	V
		V_{AGND}	AGND	P2[4]	P2[4]	P2[4]	P2[4]	–
		V_{REFLO}	Ref Low	P2[4] – P2[6] (P2[4] = $V_{DD}/2$, P2[6] = 0.5 V)	P2[4] – P2[6] – 0.037	P2[4] – P2[6] + 0.006	P2[4] – P2[6] + 0.054	V
	RefPower = medium Opamp bias = high	V_{REFHI}	Ref High	P2[4] + P2[6] (P2[4] = $V_{DD}/2$, P2[6] = 0.5 V)	P2[4] + P2[6] – 0.079	P2[4] + P2[6] – 0.012	P2[4] + P2[6] + 0.047	V
		V_{AGND}	AGND	P2[4]	P2[4]	P2[4]	P2[4]	–
		V_{REFLO}	Ref Low	P2[4]–P2[6] (P2[4] = $V_{DD}/2$, P2[6] = 0.5 V)	P2[4] – P2[6] – 0.038	P2[4] – P2[6] + 0.006	P2[4] – P2[6] + 0.057	V
	RefPower = medium Opamp bias = low	V_{REFHI}	Ref High	P2[4]+P2[6] (P2[4] = $V_{DD}/2$, P2[6] = 0.5 V)	P2[4] + P2[6] – 0.080	P2[4] + P2[6] – 0.008	P2[4] + P2[6] + 0.055	V
		V_{AGND}	AGND	P2[4]	P2[4]	P2[4]	P2[4]	–
		V_{REFLO}	Ref Low	P2[4]–P2[6] (P2[4] = $V_{DD}/2$, P2[6] = 0.5 V)	P2[4] – P2[6] – 0.032	P2[4] – P2[6] + 0.003	P2[4] – P2[6] + 0.042	V

Table 23. 3.3-V DC Analog Reference Specifications

Reference ARF_CR [5:3]	Reference Power Settings	Symbol	Reference	Description	Min	Typ	Max	Unit
0b010	RefPower = high Opamp bias = high	V_{REFHI}	Ref High	V_{DD}	V_{DD} – 0.06	V_{DD} – 0.010	V_{DD}	V
		V_{AGND}	AGND	$V_{DD}/2$	$V_{DD}/2$ – 0.05	$V_{DD}/2$ – 0.002	$V_{DD}/2$ + 0.040	V
		V_{REFLO}	Ref Low	Vss	Vss	Vss + 0.009	Vss + 0.056	V
	RefPower = high Opamp bias = low	V_{REFHI}	Ref High	V_{DD}	V_{DD} – 0.060	V_{DD} – 0.006	V_{DD}	V
		V_{AGND}	AGND	$V_{DD}/2$	$V_{DD}/2$ – 0.028	$V_{DD}/2$ – 0.001	$V_{DD}/2$ + 0.025	V
		V_{REFLO}	Ref Low	Vss	Vss	Vss + 0.005	Vss + 0.034	V
	RefPower = medium Opamp bias = high	V_{REFHI}	Ref High	V_{DD}	V_{DD} – 0.058	V_{DD} – 0.008	V_{DD}	V
		V_{AGND}	AGND	$V_{DD}/2$	$V_{DD}/2$ – 0.037	$V_{DD}/2$ – 0.002	$V_{DD}/2$ + 0.033	V
		V_{REFLO}	Ref Low	Vss	Vss	Vss + 0.007	Vss + 0.046	V
	RefPower = medium Opamp bias = low	V_{REFHI}	Ref High	V_{DD}	V_{DD} – 0.057	V_{DD} – 0.006	V_{DD}	V
		V_{AGND}	AGND	$V_{DD}/2$	$V_{DD}/2$ – 0.025	$V_{DD}/2$ – 0.001	$V_{DD}/2$ + 0.022	V
		V_{REFLO}	Ref Low	Vss	Vss	Vss + 0.004	Vss + 0.030	V
0b011	All power settings. Not allowed for 3.3 V	–	–	–	–	–	–	–
0b100	All power settings. Not allowed for 3.3 V	–	–	–	–	–	–	–
0b101	RefPower = high Opamp bias = high	V_{REFHI}	Ref High	P2[4] + Bandgap (P2[4] = $V_{DD}/2$)	P2[4] + 1.213	P2[4] + 1.291	P2[4] + 1.367	V
		V_{AGND}	AGND	P2[4]	P2[4]	P2[4]	P2[4]	V
		V_{REFLO}	Ref Low	P2[4] – Bandgap (P2[4] = $V_{DD}/2$)	P2[4] – 1.333	P2[4] – 1.294	P2[4] – 1.208	V
	RefPower = high Opamp bias = low	V_{REFHI}	Ref High	P2[4] + Bandgap (P2[4] = $V_{DD}/2$)	P2[4] + 1.217	P2[4] + 1.294	P2[4] + 1.368	V
		V_{AGND}	AGND	P2[4]	P2[4]	P2[4]	P2[4]	V
		V_{REFLO}	Ref Low	P2[4] – Bandgap (P2[4] = $V_{DD}/2$)	P2[4] – 1.320	P2[4] – 1.296	P2[4] – 1.261	V
	RefPower = medium Opamp bias = high	V_{REFHI}	Ref High	P2[4] + Bandgap (P2[4] = $V_{DD}/2$)	P2[4] + 1.217	P2[4] + 1.294	P2[4] + 1.369	V
		V_{AGND}	AGND	P2[4]	P2[4]	P2[4]	P2[4]	V
		V_{REFLO}	Ref Low	P2[4] – Bandgap (P2[4] = $V_{DD}/2$)	P2[4] – 1.322	P2[4] – 1.297	P2[4] – 1.262	V
	RefPower = medium Opamp bias = low	V_{REFHI}	Ref High	P2[4] + Bandgap (P2[4] = $V_{DD}/2$)	P2[4] + 1.219	P2[4] + 1.295	P2[4] + 1.37	V
		V_{AGND}	AGND	P2[4]	P2[4]	P2[4]	P2[4]	V
		V_{REFLO}	Ref Low	P2[4] – Bandgap (P2[4] = $V_{DD}/2$)	P2[4] – 1.324	P2[4] – 1.297	P2[4] – 1.262	V

Table 23. 3.3-V DC Analog Reference Specifications

Reference ARF_CR [5:3]	Reference Power Settings	Symbol	Reference	Description	Min	Typ	Max	Unit
0b110	RefPower = high Opamp bias = high	V_{REFHI}	Ref High	2 × Bandgap	2.507	2.598	2.698	V
		V_{AGND}	AGND	Bandgap	1.203	1.307	1.424	V
		V_{REFLO}	Ref Low	Vss	Vss	Vss + 0.012	Vss + 0.067	V
	RefPower = high Opamp bias = low	V_{REFHI}	Ref High	2 × Bandgap	2.516	2.598	2.683	V
		V_{AGND}	AGND	Bandgap	1.241	1.303	1.376	V
		V_{REFLO}	Ref Low	Vss	Vss	Vss + 0.007	Vss + 0.040	V
	RefPower = medium Opamp bias = high	V_{REFHI}	Ref High	2 × Bandgap	2.510	2.599	2.693	V
		V_{AGND}	AGND	Bandgap	1.240	1.305	1.374	V
		V_{REFLO}	Ref Low	Vss	Vss	Vss + 0.008	Vss + 0.048	V
	RefPower = medium Opamp bias = low	V_{REFHI}	Ref High	2 × Bandgap	2.515	2.598	2.683	V
		V_{AGND}	AGND	Bandgap	1.258	1.302	1.355	V
		V_{REFLO}	Ref Low	Vss	Vss	Vss + 0.005	Vss + 0.03	V
0b111	All power settings. Not allowed for 3.3 V	–	–	–	–	–	–	–

DC Analog PSoC Block Specifications

Table 24 lists guaranteed maximum and minimum specifications for the voltage and temperature ranges: 4.75 V to 5.25 V and –40 °C ≤ T_A ≤ 85 °C, or 3.0 V to 3.6 V and –40 °C ≤ T_A ≤ 85 °C, respectively. Typical parameters apply to 5 V and 3.3 V at 25 °C and are for design guidance only.

Table 24. DC Analog PSoC Block Specifications

Symbol	Description	Min	Typ	Max	Unit
R_{CT}	Resistor unit value (continuous time)	–	12.2	–	kΩ
C_{SC}	Capacitor unit value (switch cap)	–	80	–	fF

DC POR and LVD Specifications

Table 25 lists guaranteed maximum and minimum specifications for the voltage and temperature ranges: 4.75 V to 5.25 V and –40 °C ≤ T_A ≤ 85 °C, or 3.0 V to 3.6 V and –40 °C ≤ T_A ≤ 85 °C, respectively. Typical parameters apply to 5 V and 3.3 V at 25 °C and are for design guidance only.

Note The bits PORLEV and VM in the following table refer to bits in the VLT_CR register. See the *PSoC Programmable System-on-Chip Technical Reference Manual* for more information on the VLT_CR register.

Table 25. DC POR and LVD Specifications

Symbol	Description	Min	Typ	Max	Unit	Notes
	V_{DD} value for PPOR trip (positive ramp)					V_{DD} must be greater than or equal to 2.5 V during startup, reset from the XRES pin, or reset from watchdog.
V_{PPOR0R}	PORLEV[1:0] = 00b	–	2.91	–	V	
V_{PPOR1R}	PORLEV[1:0] = 01b	–	4.39	–	V	
V_{PPOR2R}	PORLEV[1:0] = 10b	–	4.55	–	V	
	V_{DD} value for PPOR trip (negative ramp)					
V_{PPOR0}	PORLEV[1:0] = 00b	–	2.82	–	V	
V_{PPOR1}	PORLEV[1:0] = 01b	–	4.39	–	V	
V_{PPOR2}	PORLEV[1:0] = 10b	–	4.55	–	V	
	PPOR hysteresis					
V_{PH0}	PORLEV[1:0] = 00b	–	92	–	mV	
V_{PH1}	PORLEV[1:0] = 01b	–	0	–	mV	
V_{PH2}	PORLEV[1:0] = 10b	–	0	–	mV	
	V_{DD} value for LVD trip					
V_{LVD0}	VM[2:0] = 000b	2.86	2.92	2.98[14]	V	
V_{LVD1}	VM[2:0] = 001b	2.96	3.02	3.08	V	
V_{LVD2}	VM[2:0] = 010b	3.07	3.13	3.20	V	
V_{LVD3}	VM[2:0] = 011b	3.92	4.00	4.08	V	
V_{LVD4}	VM[2:0] = 100b	4.39	4.48	4.57	V	
V_{LVD5}	VM[2:0] = 101b	4.55	4.64	4.74[15]	V	
V_{LVD6}	VM[2:0] = 110b	4.63	4.73	4.82	V	
V_{LVD7}	VM[2:0] = 111b	4.72	4.81	4.91	V	
	V_{DD} value for PUMP trip					
V_{PUMP0}	VM[2:0] = 000b	2.96	3.02	3.08	V	
V_{PUMP1}	VM[2:0] = 001b	3.03	3.10	3.16	V	
V_{PUMP2}	VM[2:0] = 010b	3.18	3.25	3.32	V	
V_{PUMP3}	VM[2:0] = 011b	4.11	4.19	4.28	V	
V_{PUMP4}	VM[2:0] = 100b	4.55	4.64	4.74	V	
V_{PUMP5}	VM[2:0] = 101b	4.63	4.73	4.82	V	
V_{PUMP6}	VM[2:0] = 110b	4.72	4.82	4.91	V	
V_{PUMP7}	VM[2:0] = 111b	4.90	5.00	5.10	V	

Notes
14. Always greater than 50 mV above PPOR (PORLEV = 00) for falling supply.
15. Always greater than 50 mV above PPOR (PORLEV = 10) for falling supply.

DC Programming Specifications

Table 26 lists guaranteed maximum and minimum specifications for the voltage and temperature ranges: 4.75 V to 5.25 V and –40 °C ≤ T_A ≤ 85 °C, or 3.0 V to 3.6 V and –40 °C ≤ T_A ≤ 85 °C, respectively. Typical parameters apply to 5 V and 3.3 V at 25 °C and are for design guidance only.

Table 26. DC Programming Specifications

Symbol	Description	Min	Typ	Max	Unit	Notes
V_{DDP}	V_{DD} for programming and erase	4.5	5	5.5	V	This specification applies to the functional requirements of external programmer tools.
V_{DDLV}	Low V_{DD} for verify	3	3.1	3.2	V	This specification applies to the functional requirements of external programmer tools.
V_{DDHV}	High V_{DD} for verify	5.1	5.2	5.3	V	This specification applies to the functional requirements of external programmer tools.
$V_{DDIWRITE}$	Supply voltage for flash write operation	3		5.25	V	This specification applies to this device when it is executing internal flash writes.
I_{DDP}	Supply current during programming or verify	–	5	25	mA	
V_{ILP}	Input low voltage during programming or verify	–	–	0.8	V	
V_{IHP}	Input high voltage during programming or verify	2.2	–	–	V	
I_{ILP}	Input current when applying V_{ILP} to P1[0] or P1[1] during programming or verify	–	–	0.2	mA	Driving internal pull-down resistor.
I_{IHP}	Input current when applying V_{IHP} to P1[0] or P1[1] during programming or verify	–	–	1.5	mA	Driving internal pull-down resistor.
V_{OLV}	Output low voltage during programming or verify	–	–	Vss + 0.75	V	
V_{OHV}	Output high voltage during programming or verify	V_{DD} – 1.0	–	V_{DD}	V	
$Flash_{ENPB}$	Flash endurance (per block)	50,000[16]	–	–	Cycles	Erase/write cycles per block.
$Flash_{ENT}$	Flash endurance (total)[17]	1,800,000	–	–	Cycles	Erase/write cycles.
$Flash_{DR}$	Flash data retention	10	–	–	Years	

DC I^2C Specifications

The following table lists guaranteed maximum and minimum specifications for the voltage and temperature ranges: 4.75 V to 5.25 V and –40 °C ≤ T_A ≤ 85 °C, or 3.0 V to 3.6 V and –40 °C ≤ T_A ≤ 85 °C, respectively. Typical parameters apply to 5 V and 3.3 V at 25 °C and are for design guidance only.

Table 27. DC I^2C Specifications

Parameter	Description	Min	Typ	Max	Units	Notes
V_{ILI2C}[18]	Input low level	–	–	0.3 × V_{DD}	V	3.0 V ≤ V_{DD} ≤ 3.6 V
		–	–	0.25 × V_{DD}	V	4.75 V ≤ V_{DD} ≤ 5.25 V
V_{IHI2C}[18]	Input high level	0.7 × V_{DD}	–	–	V	3.0 V ≤ V_{DD} ≤ 5.25 V

Notes

16. The 50,000 cycle flash endurance per block is only guaranteed if the flash is operating within one voltage range. Voltage ranges are 3.0 V to 3.6 V and 4.75 V to 5.25 V.
17. A maximum of 36 × 50,000 block endurance cycles is allowed. This may be balanced between operations on 36x1 blocks of 50,000 maximum cycles each, 36 × 2 blocks of 25,000 maximum cycles each, or 36 × 4 blocks of 12,500 maximum cycles each (to limit the total number of cycles to 36 × 50,000 and that no single block ever sees more than 50,000 cycles).
    For the full industrial range, you must employ a temperature sensor user module (FlashTemp) and feed the result to the temperature argument before writing. Refer to the Flash APIs application note Design Aids – Reading and Writing PSoC® Flash – AN2015 for more information.
18. All GPIOs meet the DC GPIO V_{IL} and V_{IH} specifications found in the DC GPIO specifications sections.The I^2C GPIO pins also meet the above specs.

AC Electrical Characteristics

AC Chip-Level Specifications

The following table lists guaranteed maximum and minimum specifications for the voltage and temperature ranges: 4.75 V to 5.25 V and –40 °C ≤ T_A ≤ 85 °C, or 3.0 V to 3.6 V and –40 °C ≤ T_A ≤ 85 °C, respectively. Typical parameters apply to 5 V and 3.3 V at 25 °C and are for design guidance only.

Table 28. AC Chip-Level Specifications

Symbol	Description	Min	Typ	Max	Unit	Notes
F_{IMO}	Internal main oscillator (IMO) frequency	23.4	24	24.6[19]	MHz	Trimmed. Utilizing factory trim values.
F_{CPU1}	CPU frequency (5 V nominal)	0.0914	24	24.6[19]	MHz	Trimmed. Utilizing factory trim values. SLIMO mode = 0.
F_{CPU2}	CPU frequency (3.3 V nominal)	0.0914	12	12.3[20]	MHz	Trimmed. Utilizing factory trim values. SLIMO mode = 0.
F_{48M}	Digital PSoC block frequency	0	48	49.2[19, 21]	MHz	Refer to AC Digital Block Specifications on page 40.
F_{24M}	Digital PSoC block frequency	0	24	24.6[21]	MHz	
F_{32K1}	Internal low speed oscillator (ILO) frequency	15	32	64	kHz	
F_{32K2}	External crystal oscillator	–	32.768	–	kHz	Accuracy is capacitor and crystal dependent. 50% duty cycle.
F_{32K_U}	ILO untrimmed frequency	5	–	100	kHz	After a reset and before the m8c starts to run, the ILO is not trimmed. See the System Resets section of the PSoC Technical Reference Manual for details on timing this
F_{PLL}	PLL frequency	–	23.986	–	MHz	Multiple (x732) of crystal frequency.
$t_{PLLSLEW}$	PLL lock time	0.5	–	10	ms	
$t_{PLLSLEWSLOW}$	PLL lock time for low gain setting	0.5	–	50	ms	
t_{OS}	External crystal oscillator startup to 1%	–	1700	2620	ms	
t_{OSACC}	External crystal oscillator startup to 100 ppm	–	2800	3800	ms	The crystal oscillator frequency is within 100 ppm of its final value by the end of the T_{osacc} period. Correct operation assumes a properly loaded 1 µW maximum drive level 32.768 kHz crystal. 3.0 V ≤ V_{DD} ≤ 5.5 V, –40 °C ≤ T_A ≤ 85 °C.
t_{XRST}	External reset pulse width	10	–	–	µs	
DC_{24M}	24 MHz duty cycle	40	50	60	%	
DC_{ILO}	ILO duty cycle	20	50	80	%	
$Step_{24M}$	24 MHz trim step size	–	50	–	kHz	
$t_{POWERUP}$	Time from end of POR to CPU executing code	–	16	100	ms	wer-up from 0 V. See the System Resets section of the PSoC Technical Reference Manual.
$Fout_{48M}$	48 MHz output frequency	46.8	48.0	49.2[19, 20]	MHz	Trimmed. Utilizing factory trim values.
F_{MAX}	Maximum frequency of signal on row input or row output.	–	–	12.3	MHz	
SR_{POWER_UP}	Power supply slew rate	–	–	250	V/ms	V_{DD} slew rate during power-up.

Notes
19. 4.75 V < V_{DD} < 5.25 V.
20. 3.0 V < V_{DD} < 3.6 V. See application note Adjusting PSoC® Trims for 3.3 V and 2.7 V Operation – AN2012 for information on trimming for operation at 3.3 V.
21. See the individual user module datasheets for information on maximum frequencies for user modules.

Table 28. AC Chip-Level Specifications (continued)

Symbol	Description	Min	Typ	Max	Unit	Notes
tjit_IMO[22]	24 MHz IMO cycle-to-cycle jitter (RMS)	–	200	700	ps	N = 32
	24 MHz IMO long term N cycle-to-cycle jitter (RMS)	–	300	900		
	24 MHz IMO period jitter (RMS)	–	100	400		
tjit_PLL [22]	24 MHz IMO cycle-to-cycle jitter (RMS)	–	200	800	ps	N = 32
	24 MHz IMO long term N cycle-to-cycle jitter (RMS)	–	300	1200		
	24 MHz IMO period jitter (RMS)	–	100	700		

Figure 12. PLL Lock Timing Diagram

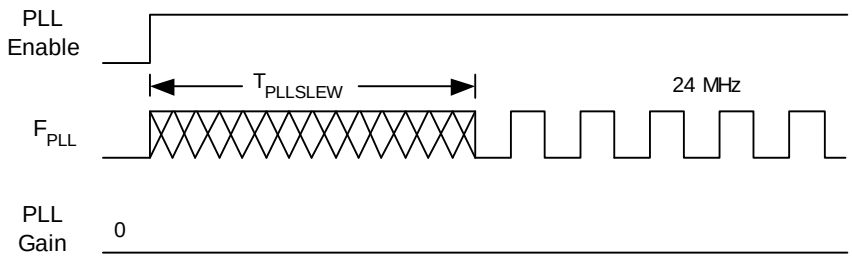

Figure 13. PLL Lock for Low Gain Setting Timing Diagram

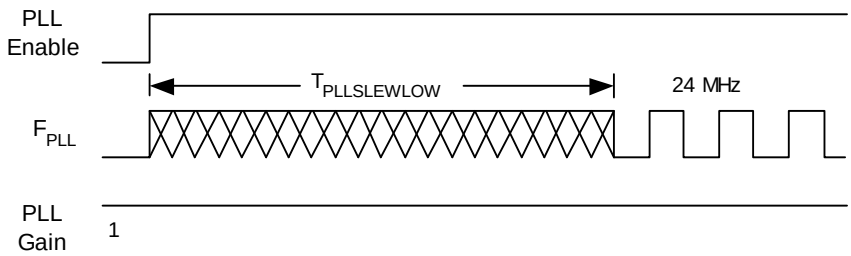

Figure 14. External Crystal Oscillator Startup Timing Diagram

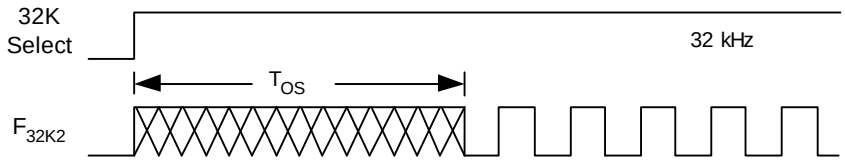

Note
22. Refer to Cypress Jitter Specifications application note, Understanding Datasheet Jitter Specifications for Cypress Timing Products – AN5054 for more information.

AC GPIO Specifications

Table 29 lists guaranteed maximum and minimum specifications for the voltage and temperature ranges: 4.75 V to 5.25 V and –40 °C ≤ T_A ≤ 85 °C, or 3.0 V to 3.6 V and –40 °C ≤ T_A ≤ 85 °C, respectively. Typical parameters apply to 5 V and 3.3 V at 25 °C and are for design guidance only.

Table 29. AC GPIO Specifications

Symbol	Description	Min	Typ	Max	Unit	Notes
F_{GPIO}	GPIO operating frequency	0	–	12	MHz	Normal strong mode
t_{RiseF}	Rise time, normal strong mode, Cload = 50 pF	3	–	18	ns	V_{DD} = 4.5 to 5.25 V, 10% to 90%
t_{FallF}	Fall time, normal strong mode, Cload = 50 pF	2	–	18	ns	V_{DD} = 4.5 to 5.25 V, 10% to 90%
t_{RiseS}	Rise time, slow strong mode, Cload = 50 pF	10	27	–	ns	V_{DD} = 3 to 5.25 V, 10% to 90%
t_{FallS}	Fall time, slow strong mode, Cload = 50 pF	10	22	–	ns	V_{DD} = 3 to 5.25 V, 10% to 90%

Figure 15. GPIO Timing Diagram

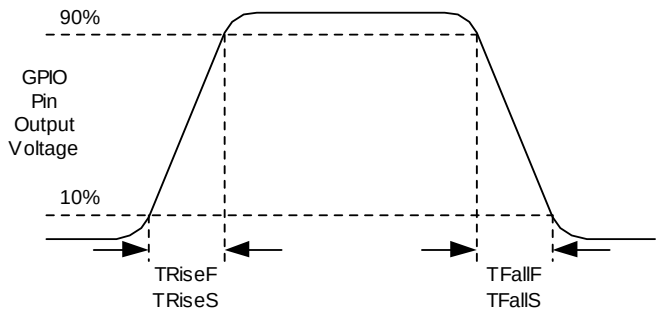

AC Operational Amplifier Specifications

The following tables list guaranteed maximum and minimum specifications for the voltage and temperature ranges: 4.75 V to 5.25 V and –40 °C ≤ T_A ≤ 85 °C, or 3.0 V to 3.6 V and –40 °C ≤ T_A ≤ 85°C, respectively. Typical parameters apply to 5 V and 3.3 V at 25 °C and are for design guidance only.

Settling times, slew rates, and gain bandwidth are based on the Analog Continuous Time PSoC block.

Power = high and Opamp bias = high is not supported at 3.3 V.

Table 30. 5-V AC Operational Amplifier Specifications

Symbol	Description	Min	Typ	Max	Unit
t_{ROA}	Rising settling time from 80% of ΔV to 0.1% of ΔV (10 pF load, Unity Gain) Power = low, Opamp bias = low Power = medium, Opamp bias = high Power = high, Opamp bias = high	 – – –	 – – –	 3.9 0.72 0.62	 µs µs µs
t_{SOA}	Falling settling time from 20% of ΔV to 0.1% of ΔV (10 pF load, Unity Gain) Power = low, Opamp bias = low Power = medium, Opamp bias = high Power = high, Opamp bias = high	 – – –	 – – –	 5.9 0.92 0.72	 µs µs µs
SR_{ROA}	Rising slew rate (20% to 80%)(10 pF load, Unity Gain) Power = low, Opamp bias = low Power = medium, Opamp bias = high Power = high, Opamp bias = high	 0.15 1.7 6.5	 – – –	 – – –	 V/µs V/µs V/µs
SR_{FOA}	Falling slew rate (20% to 80%)(10 pF load, Unity Gain) Power = low, Opamp bias = low Power = medium, Opamp bias = high Power = high, Opamp bias = high	 0.01 0.5 4.0	 – – –	 – – –	 V/µs V/µs V/µs
BW_{OA}	Gain bandwidth product Power = low, Opamp bias = low Power = medium, Opamp bias = high Power = high, Opamp bias = high	 0.75 3.1 5.4	 – – –	 – – –	 MHz MHz MHz
E_{NOA}	Noise at 1 kHz (Power = medium, Opamp bias = high)	–	100	–	nV/rt-Hz

Table 31. 3.3-V AC Operational Amplifier Specifications

Symbol	Description	Min	Typ	Max	Units
t_{ROA}	Rising settling time from 80% of ΔV to 0.1% of ΔV (10 pF load, Unity Gain) Power = low, Opamp bias = low Power = low, Opamp bias = high	 – –	 – –	 3.92 0.72	 µs µs
t_{SOA}	Falling settling time from 20% of ΔV to 0.1% of ΔV (10 pF load, Unity Gain) Power = low, Opamp bias = low Power = medium, Opamp bias = high	 – –	 – –	 5.41 0.72	 µs µs
SR_{ROA}	Rising slew rate (20% to 80%)(10 pF load, Unity Gain) Power = low, Opamp bias = low Power = medium, Opamp bias = high	 0.31 2.7	 – –	 – –	 V/µs V/µs
SR_{FOA}	Falling slew rate (20% to 80%)(10 pF load, Unity Gain) Power = low, Opamp bias = low Power = medium, Opamp bias = high	 0.24 1.8	 – –	 – –	 V/µs V/µs
BW_{OA}	Gain bandwidth product Power = low, Opamp bias = low Power = medium, Opamp bias = high	 0.67 2.8	 – –	 – –	 MHz MHz
E_{NOA}	Noise at 1 kHz (Power = medium, Opamp bias = high)	–	100	–	nV/rt-Hz

When bypassed by a capacitor on P2[4], the noise of the analog ground signal distributed to each block is reduced by a factor of up to 5 (14 dB). This is at frequencies above the corner frequency defined by the on-chip 8.1 K resistance and the external capacitor.

Figure 16. Typical AGND Noise with P2[4] Bypass

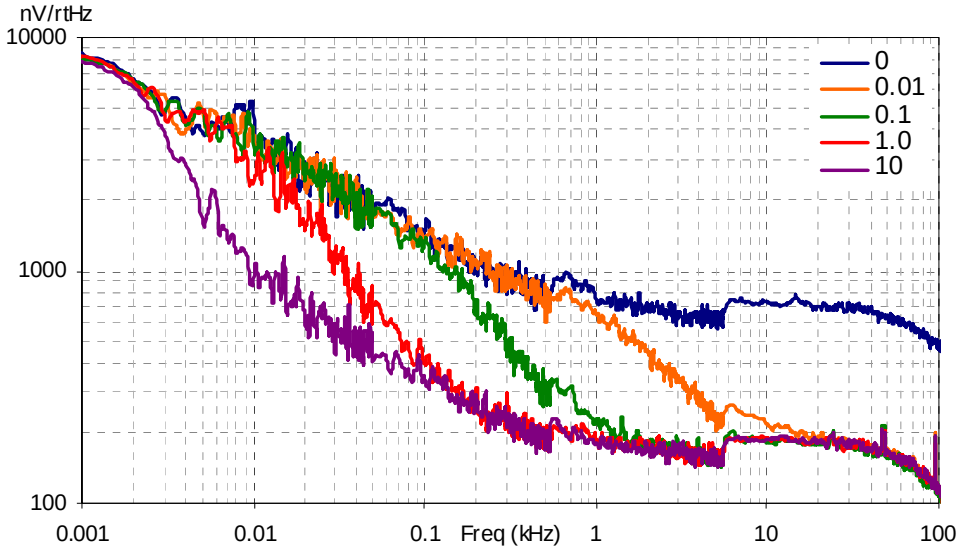

At low frequencies, the opamp noise is proportional to 1/f, power independent, and determined by device geometry. At high frequencies, increased power level reduces the noise spectrum level.

Figure 17. Typical Opamp Noise

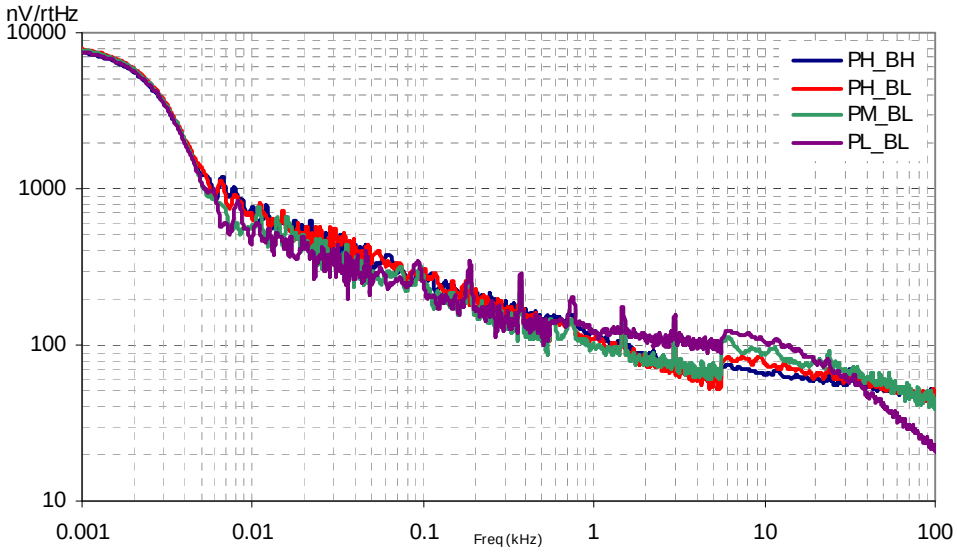

AC Low-Power Comparator Specifications

The following table lists guaranteed maximum and minimum specifications for the voltage and temperature ranges: 4.75 V to 5.25 V and –40 °C ≤ T_A ≤ 85 °C, 3.0 V to 3.6 V and –40 °C ≤ T_A ≤ 85 °C, or 2.4 V to 3.0 V and –40 °C ≤ T_A ≤ 85 °C, respectively. Typical parameters apply to 5 V at 25 °C and are for design guidance only.

Table 32. AC Low-Power Comparator Specifications

Symbol	Description	Min	Typ	Max	Unit	Notes
t_{RLPC}	LPC response time	–	–	50	µs	≥ 50 mV overdrive comparator reference set within V_{REFLPC}.

AC Digital Block Specifications

The following table lists guaranteed maximum and minimum specifications for the voltage and temperature ranges: 4.75 V to 5.25 V and –40 °C ≤ T_A ≤ 85 °C, or 3.0 V to 3.6 V and –40 °C ≤ T_A ≤ 85 °C, respectively. Typical parameters apply to 5 V and 3.3 V at 25 °C and are for design guidance only.

Table 33. AC Digital Block Specifications

Function	Description	Min	Typ	Max	Unit	Notes
All functions	Block input clock frequency					
	V_{DD} ≥ 4.75 V	–	–	49.2	MHz	
	V_{DD} < 4.75 V	–	–	24.6	MHz	
Timer	Input clock frequency					
	No capture, V_{DD} ≥ 4.75 V	–	–	49.2	MHz	
	No capture, V_{DD} < 4.75 V	–	–	24.6	MHz	
	With capture	–	–	24.6	MHz	
	Capture pulse width	50[23]	–	–	ns	
Counter	Input clock frequency					
	No enable input, V_{DD} ≥ 4.75 V	–	–	49.2	MHz	
	No enable input, V_{DD} < 4.75 V	–	–	24.6	MHz	
	With enable input	–	–	24.6	MHz	
	Enable input pulse width	50[23]	–	–	ns	
Dead Band	Kill pulse width					
	Asynchronous restart mode	20	–	–	ns	
	Synchronous restart mode	50[23]	–	–	ns	
	Disable mode	50[23]	–	–	ns	
	Input clock frequency					
	V_{DD} ≥ 4.75 V	–	–	49.2	MHz	
	V_{DD} < 4.75 V	–	–	24.6	MHz	
CRCPRS (PRS Mode)	Input clock frequency					
	V_{DD} ≥ 4.75 V	–	–	49.2	MHz	
	V_{DD} < 4.75 V	–	–	24.6	MHz	
CRCPRS (CRC Mode)	Input clock frequency	–	–	24.6	MHz	
SPIM	Input clock frequency	–	–	8.2	MHz	The SPI serial clock (SCLK) frequency is equal to the input clock frequency divided by 2.
SPIS	Input clock (SCLK) frequency	–	–	4.1	MHz	The input clock is the SPI SCLK in SPIS mode.
	Width of SS_negated between transmissions	50[23]	–	–	ns	
Transmitter	Input clock frequency					The baud rate is equal to the input clock frequency divided by 8.
	V_{DD} ≥ 4.75 V, 2 stop bits	–	–	49.2	MHz	
	V_{DD} ≥ 4.75 V, 1 stop bit	–	–	24.6	MHz	
	V_{DD} < 4.75 V	–	–	24.6	MHz	
Receiver	Input clock frequency					The baud rate is equal to the input clock frequency divided by 8.
	V_{DD} ≥ 4.75 V, 2 stop bits	–	–	49.2	MHz	
	V_{DD} ≥ 4.75 V, 1 stop bit	–	–	24.6	MHz	
	V_{DD} < 4.75 V	–	–	24.6	MHz	

Note
23. 50 ns minimum input pulse width is based on the input synchronizers running at 24 MHz (42 ns nominal period).

AC Analog Output Buffer Specifications

The following tables list guaranteed maximum and minimum specifications for the voltage and temperature ranges: 4.75 V to 5.25 V and –40 °C ≤ T_A ≤ 85 °C, or 3.0 V to 3.6 V and –40 °C ≤ T_A ≤ 85 °C, respectively. Typical parameters apply to 5 V and 3.3 V at 25 °C and are for design guidance only.

Table 34. 5-V AC Analog Output Buffer Specifications

Symbol	Description	Min	Typ	Max	Unit
t_{ROB}	Rising settling time to 0.1%, 1 V Step, 100 pF load Power = low Power = high	 – –	 – –	 2.5 2.5	 µs µs
t_{SOB}	Falling settling time to 0.1%, 1 V Step, 100 pF load Power = low Power = high	 – –	 – –	 2.2 2.2	 µs µs
SR_{ROB}	Rising slew rate (20% to 80%), 1 V Step, 100 pF load Power = low Power = high	 0.65 0.65	 – –	 – –	 V/µs V/µs
SR_{FOB}	Falling slew rate (80% to 20%), 1 V Step, 100 pF load Power = low Power = high	 0.65 0.65	 – –	 – –	 V/µs V/µs
BW_{OB}	Small signal bandwidth, 20 mV_{pp}, 3 dB BW, 100 pF load Power = low Power = high	 0.8 0.8	 – –	 – –	 MHz MHz
BW_{OB}	Large signal bandwidth, 1 V_{pp}, 3 dB BW, 100 pF load Power = low Power = high	 300 300	 – –	 – –	 kHz kHz

Table 35. 3.3-V AC Analog Output Buffer Specifications

Symbol	Description	Min	Typ	Max	Unit
t_{ROB}	Rising settling time to 0.1%, 1 V Step, 100 pF load Power = low Power = high	 – –	 – –	 3.8 3.8	 µs µs
t_{SOB}	Falling settling time to 0.1%, 1 V Step, 100 pF load Power = low Power = high	 – –	 – –	 2.6 2.6	 µs µs
SR_{ROB}	Rising slew rate (20% to 80%), 1 V Step, 100 pF load Power = low Power = high	 0.5 0.5	 – –	 – –	 V/µs V/µs
SR_{FOB}	Falling slew rate (80% to 20%), 1 V Step, 100 pF load Power = low Power = high	 0.5 0.5	 – –	 – –	 V/µs V/µs
BW_{OB}	Small signal bandwidth, 20m V_{pp}, 3 dB BW, 100 pF load Power = low Power = high	 0.7 0.7	 – –	 – –	 MHz MHz
BW_{OB}	Large signal bandwidth, 1 V_{pp}, 3 dB BW, 100 pF load Power = low Power = high	 200 200	 – –	 – –	 kHz kHz

AC External Clock Specifications

The following tables list guaranteed maximum and minimum specifications for the voltage and temperature ranges: 4.75 V to 5.25 V and –40 °C ≤ T_A ≤ 85 °C, or 3.0 V to 3.6 V and –40 °C ≤ T_A ≤ 85 °C, respectively. Typical parameters apply to 5 V and 3.3 V at 25 °C and are for design guidance only.

Table 36. 5-V AC External Clock Specifications

Symbol	Description	Min	Typ	Max	Unit
F_{OSCEXT}	Frequency	0.093	–	24.6	MHz
–	High period	20.6	–	5300	ns
–	Low period	20.6	–	–	ns
–	Power-up IMO to switch	150	–	–	µs

Table 37. 3.3-V AC External Clock Specifications

Symbol	Description	Min	Typ	Max	Unit
F_{OSCEXT}	Frequency with CPU clock divide by 1[24]	0.093	–	12.3	MHz
F_{OSCEXT}	Frequency with CPU clock divide by 2 or greater[25]	0.186	–	24.6	MHz
–	High period with CPU clock divide by 1	41.7	–	5300	ns
–	Low period with CPU clock divide by 1	41.7	–	–	ns
–	Power-up IMO to switch	150	–	–	µs

AC Programming Specifications

The following table lists guaranteed maximum and minimum specifications for the voltage and temperature ranges: 4.75 V to 5.25 V and –40 °C ≤ T_A ≤ 85 °C, or 3.0 V to 3.6 V and –40 °C ≤ T_A ≤ 85 °C, respectively. Typical parameters apply to 5 V and 3.3 V at 25 °C and are for design guidance only.

Table 38. AC Programming Specifications

Symbol	Description	Min	Typ	Max	Unit	Notes
t_{RSCLK}	Rise time of SCLK	1	–	20	ns	
t_{FSCLK}	Fall time of SCLK	1	–	20	ns	
t_{SSCLK}	Data setup time to falling edge of SCLK	40	–	–	ns	
t_{HSCLK}	Data hold time from falling edge of SCLK	40	–	–	ns	
F_{SCLK}	Frequency of SCLK	0	–	8	MHz	
t_{ERASEB}	Flash erase time (Block)	–	30	–	ms	
t_{WRITE}	Flash block write time	–	10	–	ms	
t_{DSCLK}	Data out delay from falling edge of SCLK	–	–	45	ns	$V_{DD} > 3.6$
t_{DSCLK3}	Data out delay from falling edge of SCLK	–	–	50	ns	$3.0 \le V_{DD} \le 3.6$
$t_{ERASEALL}$	Flash erase time (Bulk)	–	95	–	ms	Erase all Blocks and protection fields at once
$t_{PROGRAM_HOT}$	Flash block erase + flash block write time	–	–	80[26]	ms	0 °C ≤ Tj ≤ 100 °C
$t_{PROGRAM_COLD}$	Flash block erase + flash block write time	–	–	160[26]	ms	–40 °C ≤ Tj ≤ 0 °C

Notes
24. Maximum CPU frequency is 12 MHz at 3.3 V. With the CPU clock divider set to 1, the external clock must adhere to the maximum frequency and duty cycle requirements.
25. If the frequency of the external clock is greater than 12 MHz, the CPU clock divider must be set to 2 or greater. In this case, the CPU clock divider ensures that the fifty percent duty cycle requirement is met.
26. For the full industrial range, you must employ a temperature sensor user module (FlashTemp) and feed the result to the temperature argument before writing. Refer to the Flash APIs application note Design Aids – Reading and Writing PSoC® Flash – AN2015 for more information.

AC I²C Specifications

Table 39 lists guaranteed maximum and minimum specifications for the voltage and temperature ranges: 4.75 V to 5.25 V and –40°C ≤ T_A ≤ 85 °C, or 3.0 V to 3.6 V and –40 °C ≤ T_A ≤ 85 °C, respectively. Typical parameters apply to 5 V and 3.3 V at 25 °C and are for design guidance only.

Table 39. AC Characteristics of the I²C SDA and SCL Pins

Symbol	Description	Standard Mode		Fast Mode		Unit
		Min	Max	Min	Max	
F_{SCLI2C}	SCL clock frequency	0	100	0	400	kHz
$t_{HDSTAI2C}$	Hold time (repeated) start condition. After this period, the first clock pulse is generated.	4.0	–	0.6	–	µs
t_{LOWI2C}	Low period of the SCL clock	4.7	–	1.3	–	µs
$t_{HIGHI2C}$	High period of the SCL clock	4.0	–	0.6	–	µs
$t_{SUSTAI2C}$	Set up time for a repeated start condition	4.7	–	0.6	–	µs
$t_{HDDATI2C}$	Data hold time	0	–	0	–	µs
$t_{SUDATI2C}$	Data set up time	250	–	100[27]	–	ns
$t_{SUSTOI2C}$	Set up time for stop condition	4.0	–	0.6	–	µs
t_{BUFI2C}	Bus-free time between a stop and start condition	4.7	–	1.3	–	µs
t_{SPI2C}	Pulse width of spikes are suppressed by the input filter.	–	–	0	50	ns

Figure 18. Definition for Timing for Fast/Standard Mode on the I²C Bus

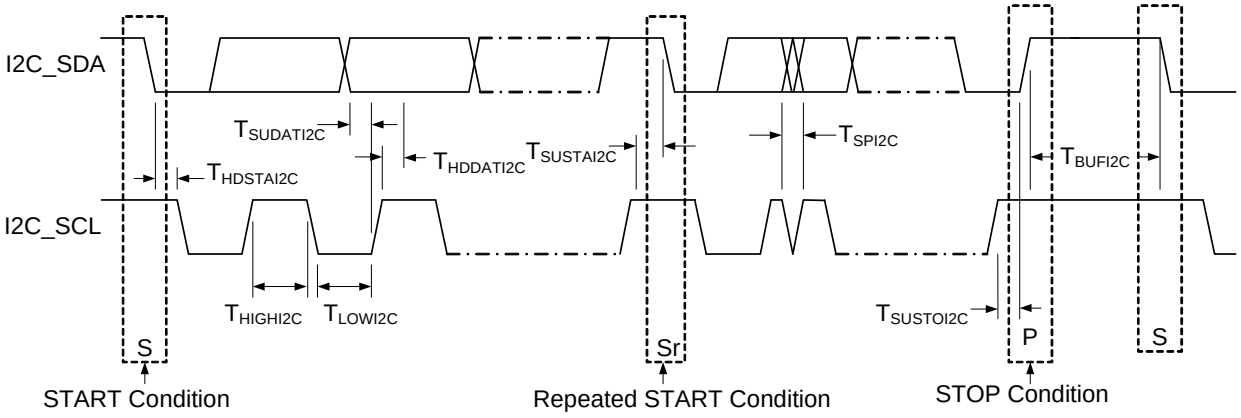

Note

27. A Fast-Mode I2C-bus device can be used in a Standard-Mode I2C-bus system, but the requirement $t_{SU;DAT}$ ≥ 250 ns must then be met. This is automatically the case if the device does not stretch the LOW period of the SCL signal. If such device does stretch the LOW period of the SCL signal, it must output the next data bit to the SDA line t_{rmax} + $t_{SU;DAT}$ = 1000 + 250 = 1250 ns (according to the Standard-Mode I2C-bus specification) before the SCL line is released.

Packaging Information

This section illustrates the packaging specifications for the CY8C27x43 PSoC device, along with the thermal impedances for each package and the typical package capacitance on crystal pins.

Important Note Emulation tools may require a larger area on the target PCB than the chip's footprint. For a detailed description of the emulation tools' dimensions, refer to the emulator pod drawings at http://www.cypress.com/design/MR10161.

Packaging Dimensions

Figure 19. 8-pin (300-Mil) PDIP

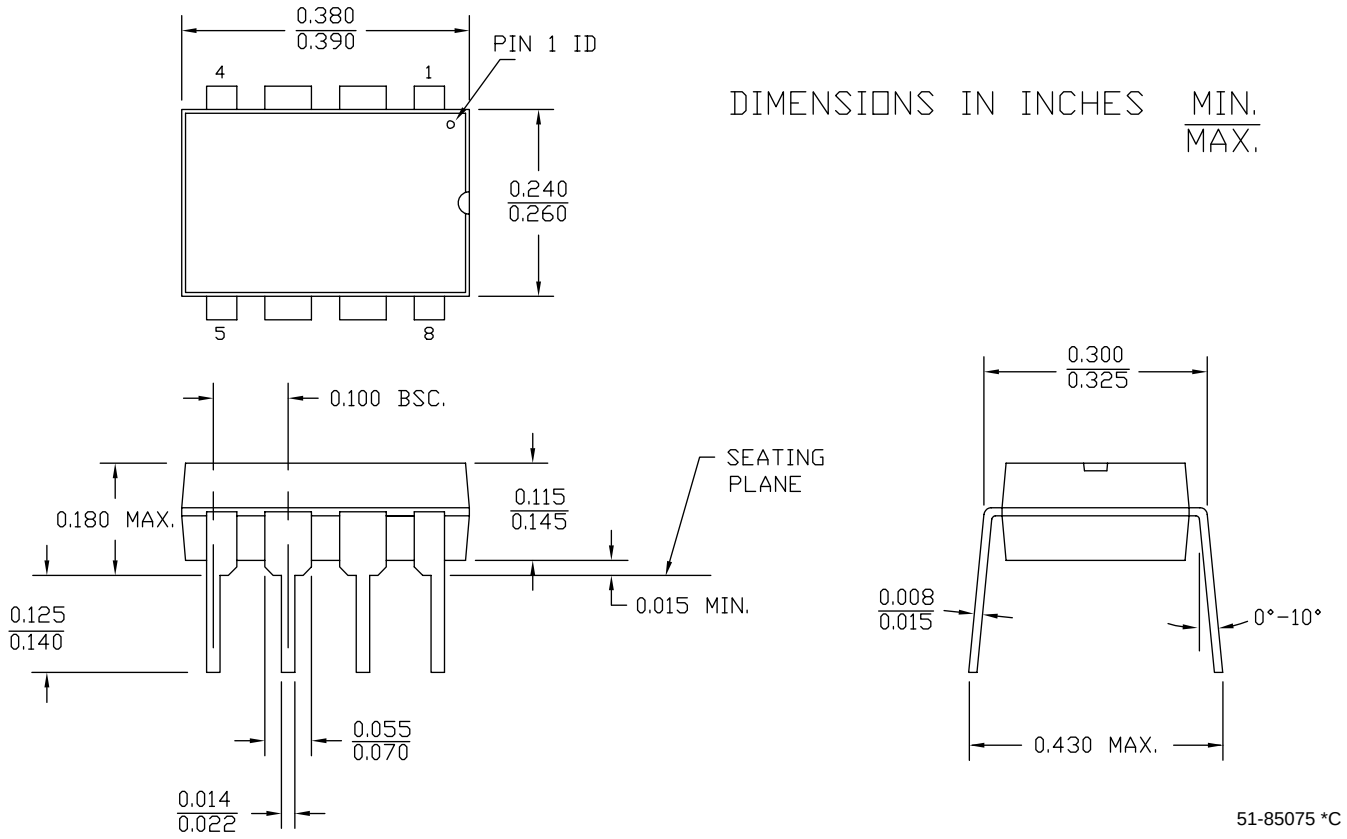

Figure 20. 20-pin (210-Mil) SSOP

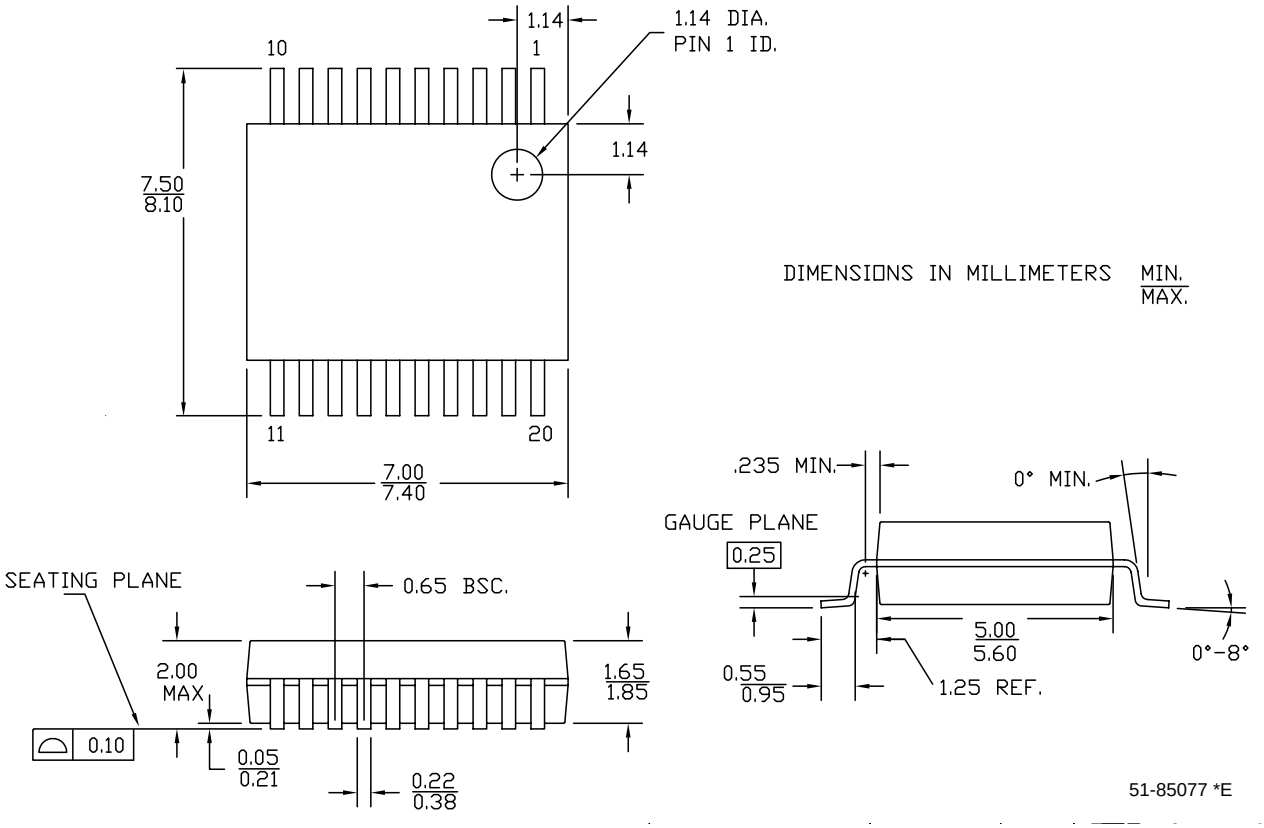

Figure 21. 20-pin (300-Mil) Molded SOIC

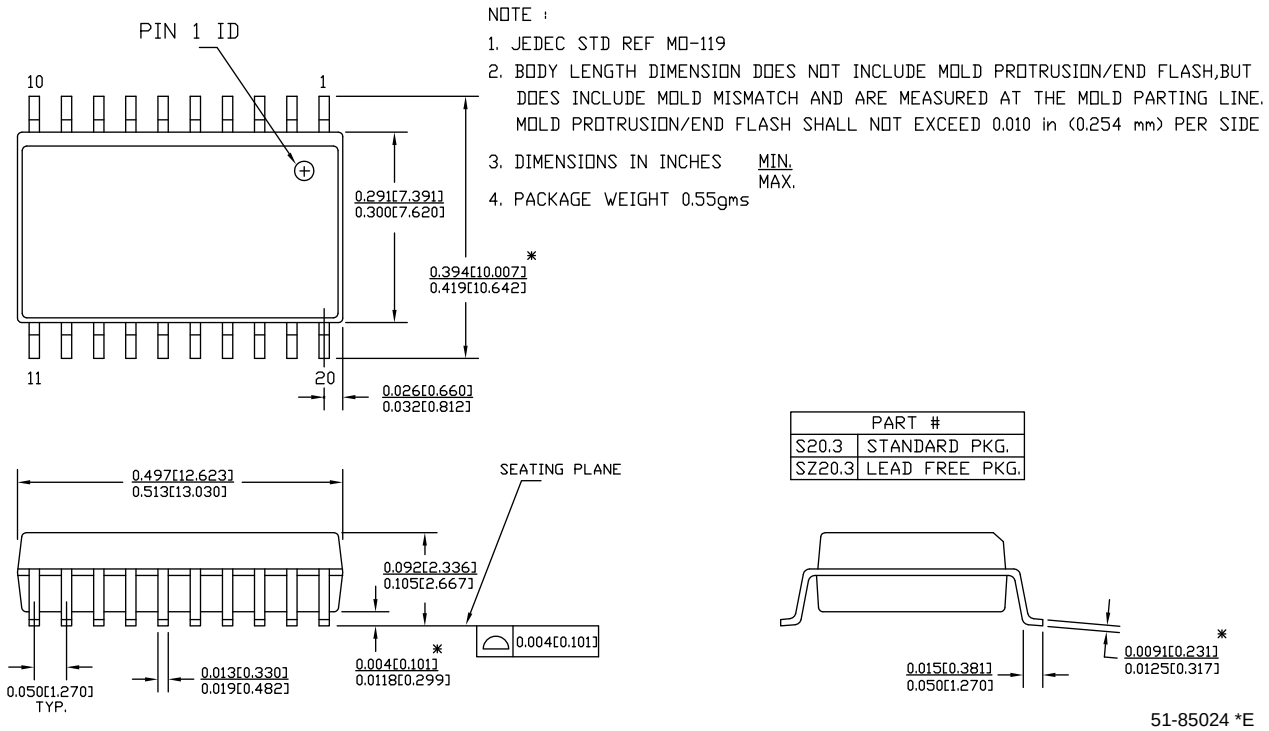

Figure 22. 28-pin (300-Mil) Molded DIP

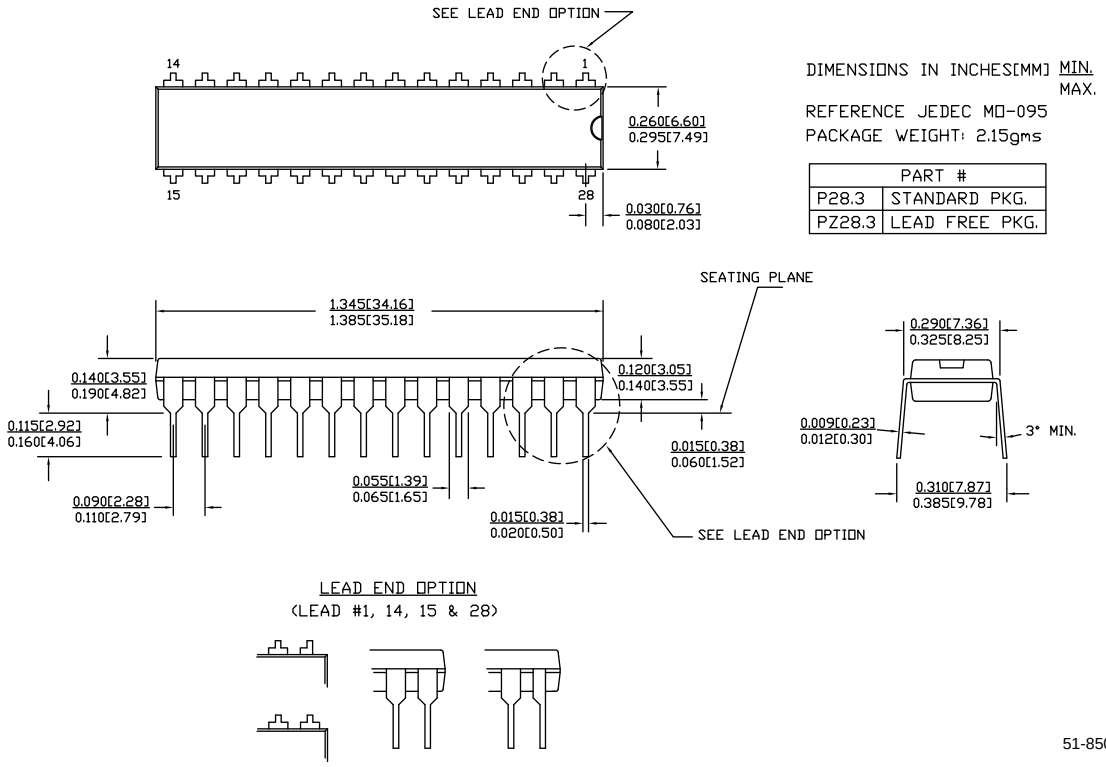

Figure 23. 28-pin (210-Mil) SSOP

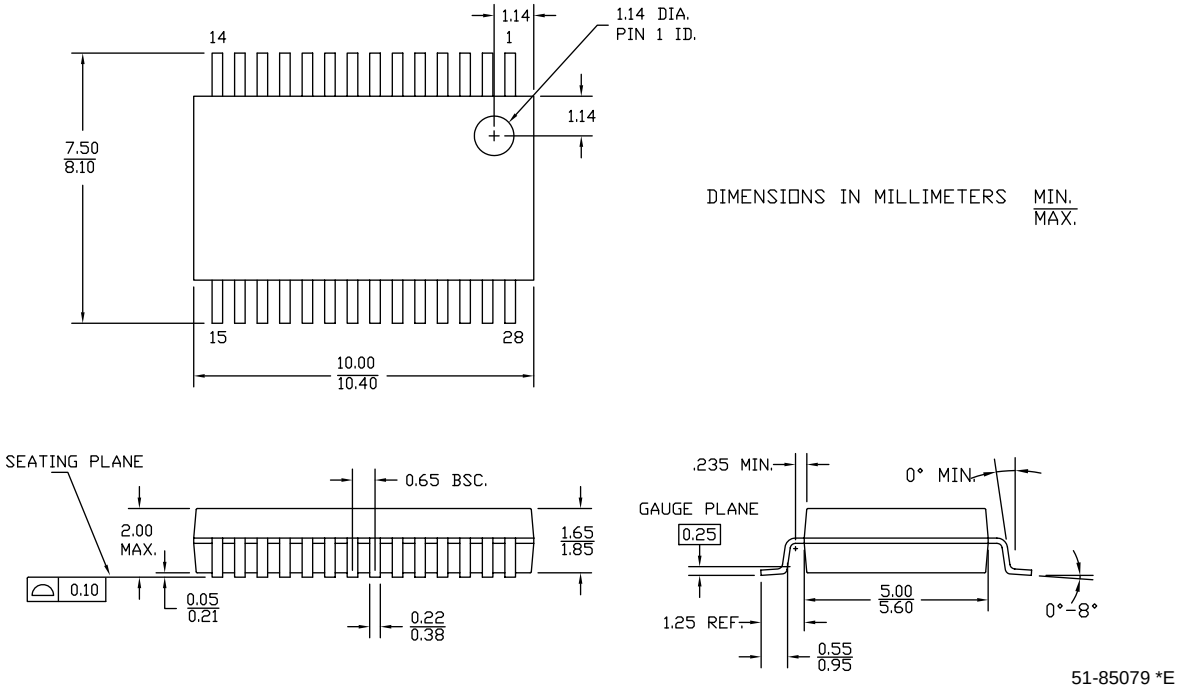

Figure 24. 28-pin (300-Mil) Molded SOIC

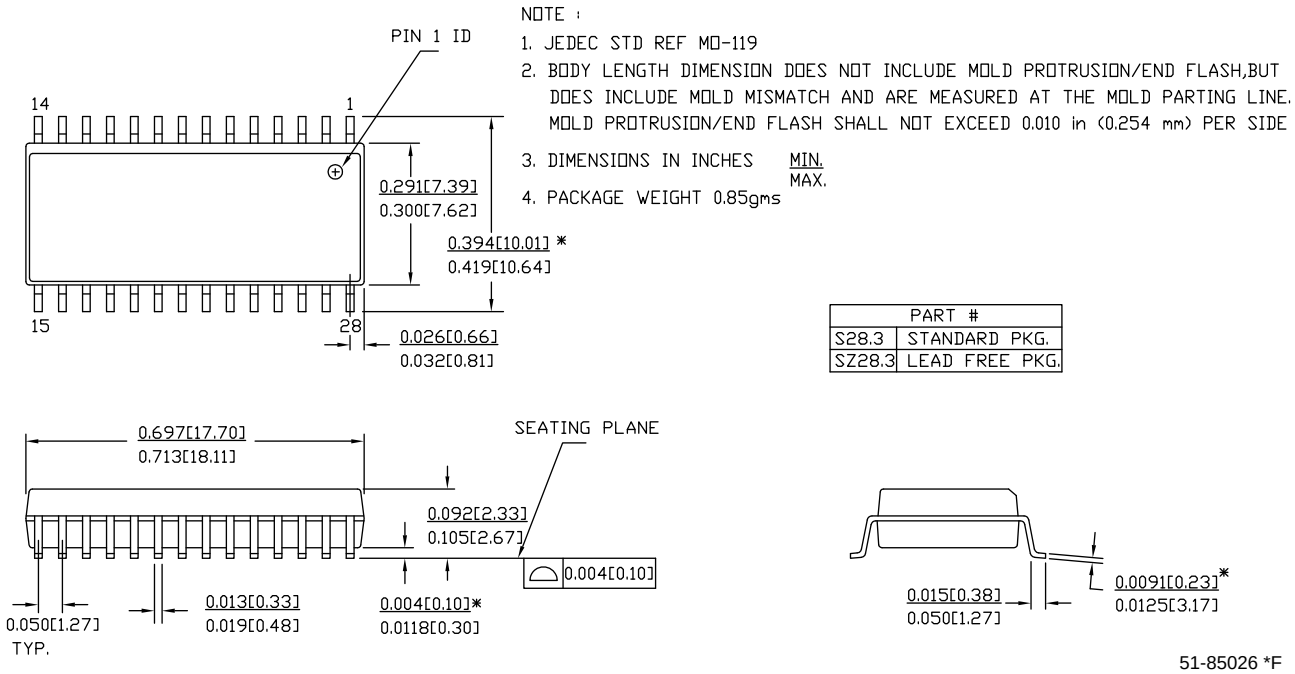

Figure 25. 44-pin TQFP

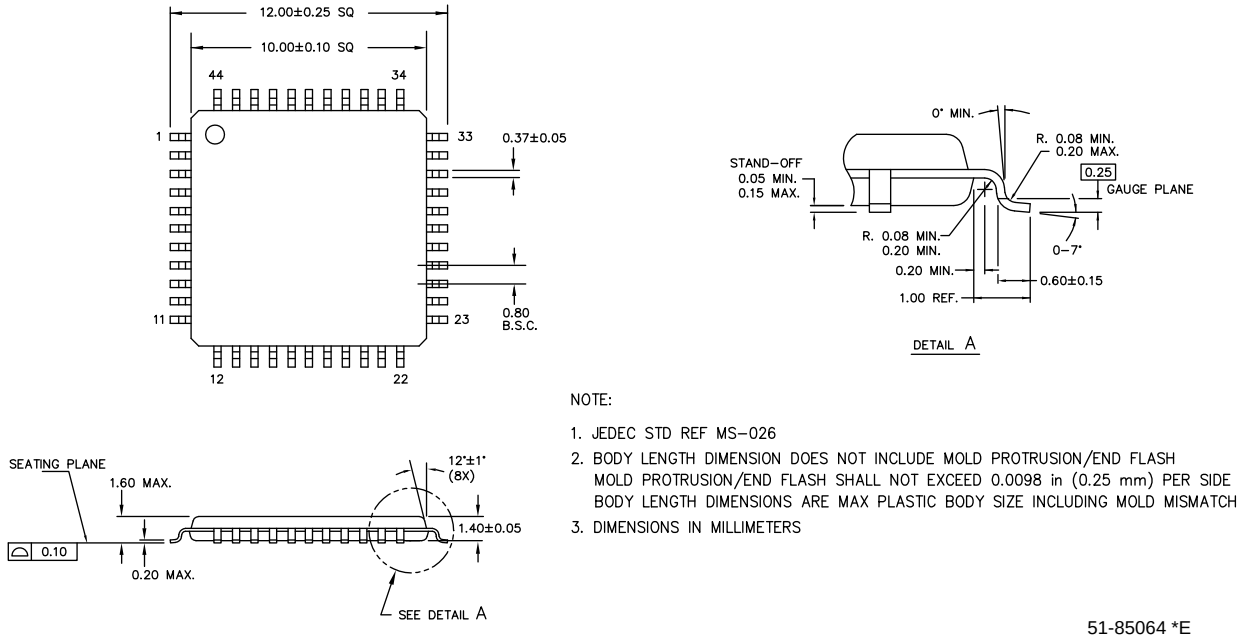

NOTE:

1. JEDEC STD REF MS-026
2. BODY LENGTH DIMENSION DOES NOT INCLUDE MOLD PROTRUSION/END FLASH MOLD PROTRUSION/END FLASH SHALL NOT EXCEED 0.0098 in (0.25 mm) PER SIDE BODY LENGTH DIMENSIONS ARE MAX PLASTIC BODY SIZE INCLUDING MOLD MISMATCH
3. DIMENSIONS IN MILLIMETERS

51-85064 *E

Figure 26. 48-pin (300-Mil) SSOP

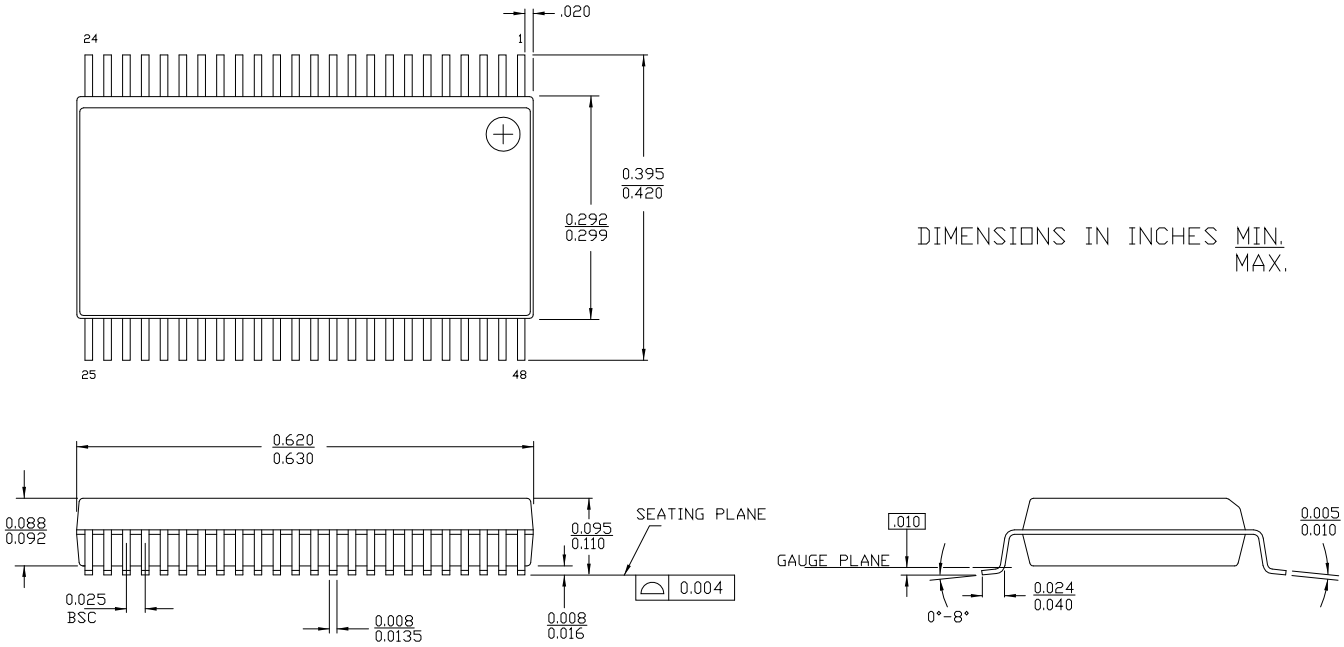

51-85061 *E

Figure 27. 48-pin QFN 7 × 7 × 1 mm (Sawn Type)

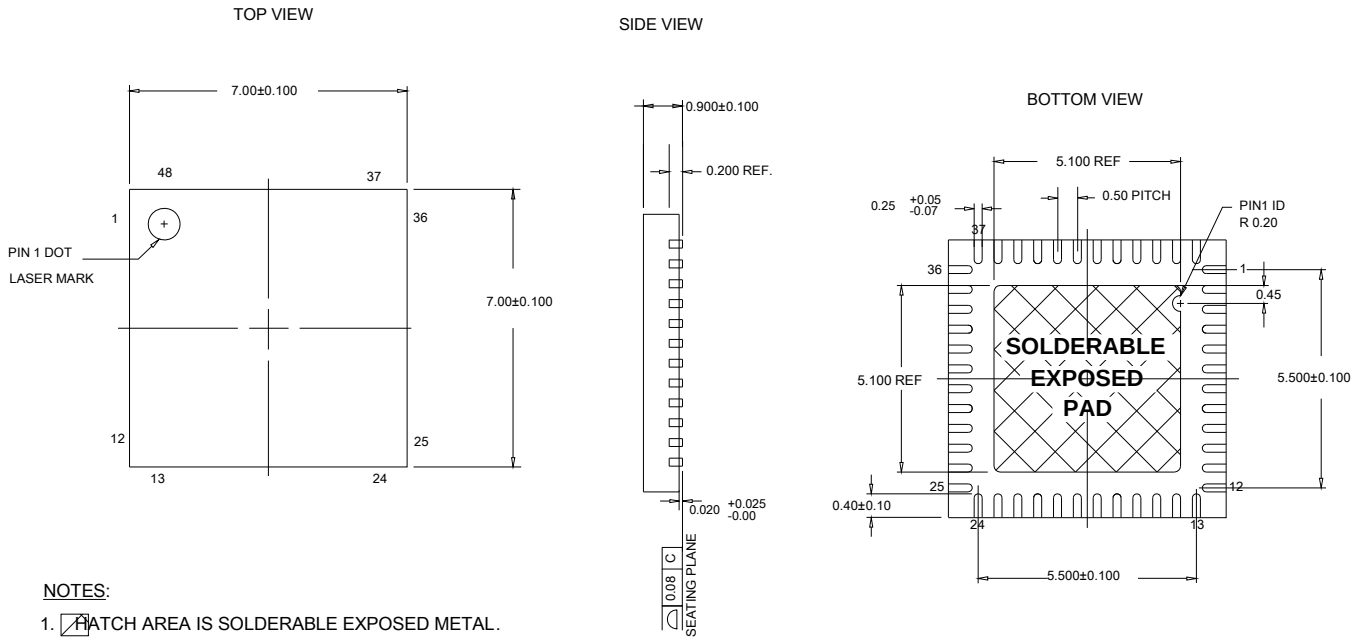

NOTES:

1. HATCH AREA IS SOLDERABLE EXPOSED METAL.
2. REFERENCE JEDEC#: MO-220
3. PACKAGE WEIGHT: 0.13g
4. ALL DIMENSIONS ARE IN MILLIMETERS

001-13191 *E

Figure 28. 56-pin (300-Mil) SSOP

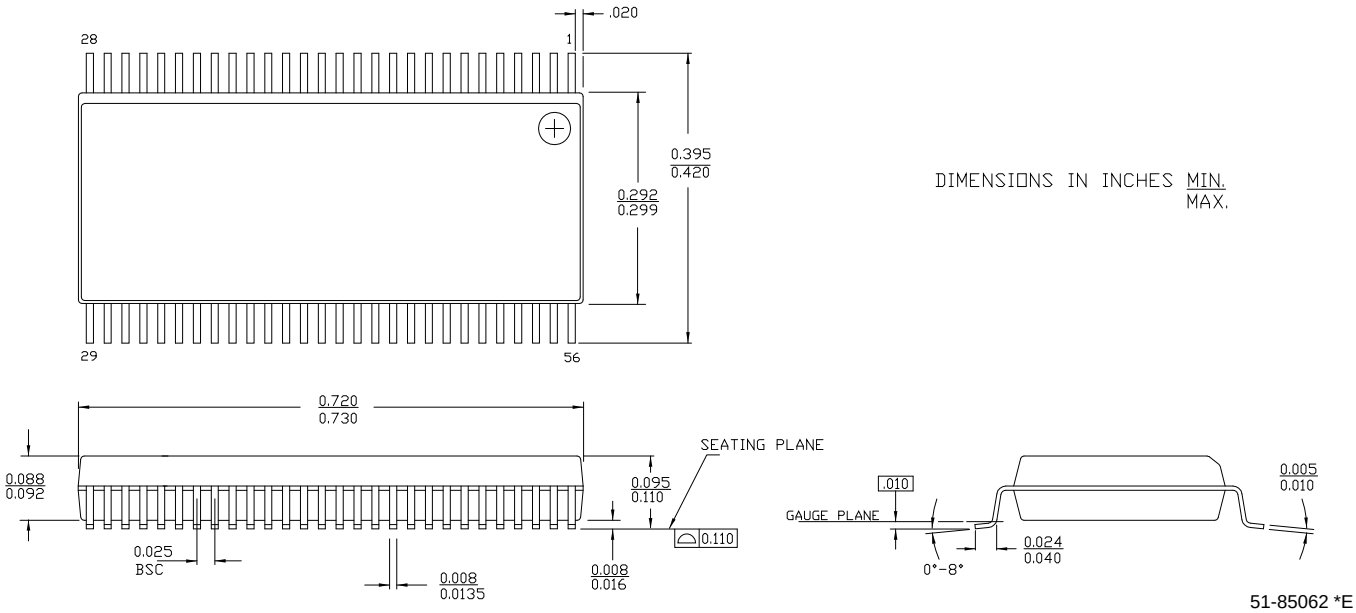

51-85062 *E

Important Note For information on the preferred dimensions for mounting QFN packages, see the following application note, *Application Notes for Surface Mount Assembly of Amkor's MicroLeadFrame (MLF) Packages* available at http://www.amkor.com.

Thermal Impedances

Table 40. Thermal Impedances per Package

Package	Typical θ_{JA}[28]
8-pin PDIP	120 °C/W
20-pin SSOP	116 °C/W
20-pin SOIC	79 °C/W
28-pin PDIP	67 °C/W
28-pin SSOP	95 °C/W
28-pin SOIC	68 °C/W
44-pin TQFP	61 °C/W
48-pin SSOP	69 °C/W
48-pin QFN[29]	18 °C/W
56-pin SSOP	47 °C/W

Capacitance on Crystal Pins

Table 41. Typical Package Capacitance on Crystal Pins

Package	Package Capacitance
8-pin PDIP	2.8 pF
20-pin SSOP	2.6 pF
20-pin SOIC	2.5 pF
28-pin PDIP	3.5 pF
28-pin SSOP	2.8 pF
28-pin SOIC	2.7 pF
44-pin TQFP	2.6 pF
48-pin SSOP	3.3 pF
48-pin QFN	2.3 pF
56-pin SSOP	3.3 pF

Solder Reflow Specifications

The following table shows the solder reflow temperature limits that must not be exceeded. Thermap ramp rate should 3 °C or lower.

Table 42. Solder Reflow Specifications

Package	Maximum Peak Temperature (T_C)[30]	Maximum Time above T_C – 5 °C
8-pin PDIP	260 °C	30 seconds
20-pin SSOP	260 °C	30 seconds
20-pin SOIC	260 °C	30 seconds
28-pin PDIP	260 °C	30 seconds
28-pin SSOP	260 °C	30 seconds
28-pin SOIC	260 °C	30 seconds
44-pin TQFP	260 °C	30 seconds
48-pin SSOP	260 °C	30 seconds
48-pin QFN	260 °C	30 seconds
56-pin SSOP	260 °C	30 seconds

Notes

28. $T_J = T_A + POWER \times \theta_{JA.}$
29. To achieve the thermal impedance specified for the QFN package, refer to "Application Notes for Surface Mount Assembly of Amkor's Micro-LeadFrame (MLF) Packages" available at http://www.amkor.com.
30. Refer to Table 44 on page 53.

Development Tool Selection

This chapter presents the development tools available for all current PSoC device families including the CY8C27x43 family.

Software

PSoC Designer™

At the core of the PSoC development software suite is PSoC Designer, used to generate PSoC firmware applications. PSoC Designer is available free of charge at http://www.cypress.com and includes a free C compiler.

PSoC Programmer

Flexible enough to be used on the bench in development, yet suitable for factory programming, PSoC Programmer works either as a standalone programming application or it can operate directly from PSoC Designer or PSoC Express. PSoC Programmer software is compatible with both PSoC ICE-Cube In-Circuit Emulator and PSoC MiniProg. PSoC programmer is available free of charge at http://www.cypress.com.

Development Kits

All development kits can be purchased from the Cypress Online Store.

CY3215-DK Basic Development Kit

The CY3215-DK is for prototyping and development with PSoC Designer. This kit supports in-circuit emulation and the software interface lets you to run, halt, and single step the processor and view the content of specific memory locations. Advance emulation features also supported through PSoC Designer. The kit includes:

- PSoC Designer Software CD
- ICE-Cube In-Circuit Emulator
- ICE Flex-Pod for CY8C29x66 Family
- Cat-5 Adapter
- Mini-Eval Programming Board
- 110 ~ 240 V Power Supply, Euro-Plug Adapter
- iMAGEcraft C Compiler
- ISSP Cable
- USB 2.0 Cable and Blue Cat-5 Cable
- 2 CY8C29466-24PXI 28-PDIP Chip Samples

Evaluation Tools

All evaluation tools can be purchased from the Cypress Online Store.

CY3210-MiniProg1

The CY3210-MiniProg1 kit lets you to program PSoC devices via the MiniProg1 programming unit. The MiniProg is a small, compact prototyping programmer that connects to the PC via a provided USB 2.0 cable. The kit includes:

- MiniProg Programming Unit
- MiniEval Socket Programming and Evaluation Board
- 28-pin CY8C29466-24PXI PDIP PSoC Device Sample
- 28-pin CY8C27443-24PXI PDIP PSoC Device Sample
- PSoC Designer Software CD
- Getting Started Guide
- USB 2.0 Cable

CY3210-PSoCEval1

The CY3210-PSoCEval1 kit features an evaluation board and the MiniProg1 programming unit. The evaluation board includes an LCD module, potentiometer, LEDs, and plenty of bread-boarding space to meet all of your evaluation needs. The kit includes:

- Evaluation Board with LCD Module
- MiniProg Programming Unit
- 28-pin CY8C29466-24PXI PDIP PSoC Device Sample (2)
- PSoC Designer Software CD
- Getting Started Guide
- USB 2.0 Cable

CY3214-PSoCEvalUSB

The CY3214-PSoCEvalUSB evaluation kit features a development board for the CY8C24794-24LFXI PSoC device. Special features of the board include both USB and capacitive sensing development and debugging support. This evaluation board also includes an LCD module, potentiometer, LEDs, an enunciator and plenty of bread boarding space to meet all of your evaluation needs. The kit includes:

- PSoCEvalUSB Board
- LCD Module
- MIniProg Programming Unit
- Mini USB Cable
- PSoC Designer and Example Projects CD
- Getting Started Guide
- Wire Pack

Device Programmers

All device programmers can be purchased from the Cypress Online Store.

CY3216 Modular Programmer

The CY3216 Modular Programmer kit features a modular programmer and the MiniProg1 programming unit. The modular programmer includes three programming module cards and supports multiple Cypress products. The kit includes:

- Modular Programmer Base
- 3 Programming Module Cards
- MiniProg Programming Unit
- PSoC Designer Software CD
- Getting Started Guide
- USB 2.0 Cable

CY3207ISSP In-System Serial Programmer (ISSP)

The CY3207ISSP is a production programmer. It includes protection circuitry and an industrial case that is more robust than the MiniProg in a production-programming environment.
Note CY3207ISSP needs special software and is not compatible with PSoC Programmer. The kit includes:

- CY3207 Programmer Unit
- PSoC ISSP Software CD
- 110 ~ 240 V Power Supply, Euro-Plug Adapter
- USB 2.0 Cable

Accessories (Emulation and Programming)

Table 43. Emulation and Programming Accessories

Part #	Pin Package	Flex-Pod Kit[31]	Foot Kit[32]	Adapter[33]
CY8C27143-24PXI	8-pin PDIP	CY3250-27XXX	CY3250-8PDIP-FK	Adapters can be found at http://www.emulation.com.
CY8C27243-24PVXI	20-pin SSOP	CY3250-27XXX	CY3250-20SSOP-FK	
CY8C27243-24SXI	20-pin SOIC	CY3250-27XXX	CY3250-20SOIC-FK	
CY8C27443-24PXI	28-pin PDIP	CY3250-27XXX	CY3250-28PDIP-FK	
CY8C27443-24PVXI	28-pin SSOP	CY3250-27XXX	CY3250-28SSOP-FK	
CY8C27443-24SXI	28-pin SOIC	CY3250-27XXX	CY3250-28SOIC-FK	
CY8C27543-24AXI	44-pin TQFP	CY3250-27XXX	CY3250-44TQFP-FK	
CY8C27643-24PVXI	48-pin SSOP	CY3250-27XXX	CY3250-48SSOP-FK	
CY8C27643-24LTXI	48-pin QFN	CY3250-27XXXQFN	CY3250-48QFN-FK	

Notes
31. Flex-Pod kit includes a practice flex-pod and a practice PCB, in addition to two flex-pods.
32. Foot kit includes surface mount feet that can be soldered to the target PCB.
33. Programming adapter converts non-DIP package to DIP footprint. Specific details and ordering information for each of the adapters can be found at http://www.emulation.com.

Ordering Information

The following table lists the CY8C27x43 PSoC device's key package features and ordering codes.

Table 44. CY8C27x43 PSoC Device Key Features and Ordering Information

Package	Ordering Code	Flash (Bytes)	RAM (Bytes)	Switch Mode Pump	Temperature Range	Digital Blocks (Rows of 4)	Analog Blocks (Columns of 3)	Digital I/O Pins	Analog Inputs	Analog Outputs	XRES Pin
8-pin (300-Mil) DIP	CY8C27143-24PXI	16 K	256	No	–40 °C to +85 °C	8	12	6	4	4	No
20-pin (210-Mil) SSOP	CY8C27243-24PVXI	16 K	256	Yes	–40 °C to +85 °C	8	12	16	8	4	Yes
20-pin (210-Mil) SSOP (Tape and Reel)	CY8C27243-24PVXIT	16 K	256	Yes	–40 °C to +85 °C	8	12	16	8	4	Yes
20-pin (300-Mil) SOIC	CY8C27243-24SXI	16 K	256	Yes	–40 °C to +85 °C	8	12	16	8	4	Yes
20-pin (300-Mil) SOIC (Tape and Reel)	CY8C27243-24SXIT	16 K	256	Yes	–40 °C to +85 °C	8	12	16	8	4	Yes
28-pin (300-Mil) DIP	CY8C27443-24PXI	16 K	256	Yes	–40 °C to +85 °C	8	12	24	12	4	Yes
28-pin (210-Mil) SSOP	CY8C27443-24PVXI	16 K	256	Yes	–40 °C to +85 °C	8	12	24	12	4	Yes
28-pin (210-Mil) SSOP (Tape and Reel)	CY8C27443-24PVXIT	16 K	256	Yes	–40 °C to +85 °C	8	12	24	12	4	Yes
28-pin (300-Mil) SOIC	CY8C27443-24SXI	16 K	256	Yes	–40 °C to +85 °C	8	12	24	12	4	Yes
28-pin (300-Mil) SOIC (Tape and Reel)	CY8C27443-24SXIT	16 K	256	Yes	–40 °C to +85 °C	8	12	24	12	4	Yes
44-pin TQFP	CY8C27543-24AXI	16 K	256	Yes	–40 °C to +85 °C	8	12	40	12	4	Yes
44-pin TQFP (Tape and Reel)	CY8C27543-24AXIT	16 K	256	Yes	–40 °C to +85 °C	8	12	40	12	4	Yes
48-pin (300-Mil) SSOP	CY8C27643-24PVXI	16 K	256	Yes	–40 °C to +85 °C	8	12	44	12	4	Yes
48-pin (300-Mil) SSOP (Tape and Reel)	CY8C27643-24PVXIT	16 K	256	Yes	–40 °C to +85 °C	8	12	44	12	4	Yes
48-pin (7 × 7 × 1 mm) QFN (Sawn)	CY8C27643-24LTXI	16 K	256	Yes	–40 °C to +85 °C	8	12	44	12	4	Yes
48-pin (7 × 7 × 1 mm) QFN (Sawn)	CY8C27643-24LTXIT	16 K	256	Yes	–40 °C to +85 °C	8	12	44	12	4	Yes
56-pin OCD SSOP	CY8C27002-24PVXI[34]	16 K	256	Yes	–40 °C to +85 °C	8	12	44	14	4	Yes

Note For Die sales information, contact a local Cypress sales office or Field Applications Engineer (FAE).

Note
34. This part may be used for in-circuit debugging. It is NOT available for production.

Ordering Code Definitions

CY 8 C 27 xxx-24xx

- Package Type:
  PX = PDIP Pb-free
  SX = SOIC Pb-free
  PVX = SSOP Pb-free
  LFX/LKX/LTX /LQX/LCX= QFN Pb-free
  AX = TQFP Pb-free
- Thermal Rating:
  C = Commercial
  I = Industrial
  E = Extended
- Speed: 24 MHz
- Part Number
- Family Code
- Technology Code: C = CMOS
- Marketing Code: 8 = Cypress PSoC
- Company ID: CY = Cypress

Acronyms

Table 45 lists the acronyms that are used in this document.

Table 45. Acronyms Used in this Datasheet

Acronym	Description	Acronym	Description
AC	alternating current	MIPS	million instructions per second
ADC	analog-to-digital converter	OCD	on-chip debug
API	application programming interface	PCB	printed circuit board
CMOS	complementary metal oxide semiconductor	PDIP	plastic dual-in-line package
CPU	central processing unit	PGA	programmable gain amplifier
CRC	cyclic redundancy check	PLL	phase-locked loop
CT	continuous time	POR	power on reset
DAC	digital-to-analog converter	PPOR	precision power on reset
DC	direct current	PRS	pseudo-random sequence
DTMF	dual-tone multi-frequency	PSoC	Programmable System-on-Chip
ECO	external crystal oscillator	PWM	pulse width modulator
EEPROM	electrically erasable programmable read-only memory	QFN	quad flat no leads
GPIO	general purpose I/O	RTC	real time clock
ICE	in-circuit emulator	SAR	successive approximation
IDE	integrated development environment	SC	switched capacitor
ILO	internal low speed oscillator	SMP	switch mode pump
IMO	internal main oscillator	SOIC	small-outline integrated circuit
I/O	input/output	SPI	serial peripheral interface
IrDA	infrared data association	SRAM	static random access memory
ISSP	in-system serial programming	SROM	supervisory read only memory
LCD	liquid crystal display	SSOP	shrink small-outline package
LED	light-emitting diode	TQFP	thin quad flat pack
LPC	low power comparator	UART	universal asynchronous reciever / transmitter
LVD	low voltage detect	USB	universal serial bus
MAC	multiply-accumulate	WDT	watchdog timer
MCU	microcontroller unit	XRES	external reset

Reference Documents

CY8CPLC20, CY8CLED16P01, CY8C29x66, CY8C27x43, CY8C24x94, CY8C24x23, CY8C24x23A, CY8C22x13, CY8C21x34, CY8C21x23, CY7C64215, CY7C603xx, CY8CNP1xx, and CYWUSB6953 PSoC® Programmable System-on-Chip Technical Reference Manual (TRM) (001-14463)

Design Aids – Reading and Writing PSoC® Flash - AN2015 (001-40459)

Adjusting PSoC® Trims for 3.3 V and 2.7 V Operation – AN2012 (001-17397)

Understanding Datasheet Jitter Specifications for Cypress Timing Products – AN5054 (001-14503)

Application Notes for Surface Mount Assembly of Amkor's MicroLeadFrame (MLF) Packages – available at http://www.amkor.com.

Document Conventions

Units of Measure

Table 46 lists the unit sof measures.

Table 46. Units of Measure

Symbol	Unit of Measure	Symbol	Unit of Measure
dB	decibels	ms	millisecond
°C	degree Celsius	ns	nanosecond
fF	femto farad	ps	picosecond
pF	picofarad	µV	microvolts
kHz	kilohertz	mV	millivolts
MHz	megahertz	mVpp	millivolts peak-to-peak
rt-Hz	root hertz	nV	nanovolts
kΩ	kilohm	V	volts
Ω	ohm	µW	microwatts
µA	microampere	W	watt
mA	milliampere	mm	millimeter
nA	nanoampere	ppm	parts per million
pA	pikoampere	%	percent
µs	microsecond		

Numeric Conventions

Hexadecimal numbers are represented with all letters in uppercase with an appended lowercase ‘h’ (for example, ‘14h’ or ‘3Ah’). Hexadecimal numbers may also be represented by a ‘0x’ prefix, the C coding convention. Binary numbers have an appended lowercase ‘b’ (for example, 01010100b’ or ‘01000011b’). Numbers not indicated by an ‘h’, ‘b’, or 0x are decimal.

Glossary

active high
1. A logic signal having its asserted state as the logic 1 state.
2. A logic signal having the logic 1 state as the higher voltage of the two states.

analog blocks
The basic programmable opamp circuits. These are SC (switched capacitor) and CT (continuous time) blocks. These blocks can be interconnected to provide ADCs, DACs, multi-pole filters, gain stages, and much more.

analog-to-digital (ADC)
A device that changes an analog signal to a digital signal of corresponding magnitude. Typically, an ADC converts a voltage to a digital number. The digital-to-analog (DAC) converter performs the reverse operation.

Application programming interface (API)
A series of software routines that comprise an interface between a computer application and lower level services and functions (for example, user modules and libraries). APIs serve as building blocks for programmers that create software applications.

asynchronous
A signal whose data is acknowledged or acted upon immediately, irrespective of any clock signal.

Bandgap reference
A stable voltage reference design that matches the positive temperature coefficient of VT with the negative temperature coefficient of VBE, to produce a zero temperature coefficient (ideally) reference.

bandwidth
1. The frequency range of a message or information processing system measured in hertz.
2. The width of the spectral region over which an amplifier (or absorber) has substantial gain (or loss); it is sometimes represented more specifically as, for example, full width at half maximum.

Glossary (continued)

bias	1. A systematic deviation of a value from a reference value. 2. The amount by which the average of a set of values departs from a reference value. 3. The electrical, mechanical, magnetic, or other force (field) applied to a device to establish a reference level to operate the device.
block	1. A functional unit that performs a single function, such as an oscillator. 2. A functional unit that may be configured to perform one of several functions, such as a digital PSoC block or an analog PSoC block.
buffer	1. A storage area for data that is used to compensate for a speed difference, when transferring data from one device to another. Usually refers to an area reserved for IO operations, into which data is read, or from which data is written. 2. A portion of memory set aside to store data, often before it is sent to an external device or as it is received from an external device. 3. An amplifier used to lower the output impedance of a system.
bus	1. A named connection of nets. Bundling nets together in a bus makes it easier to route nets with similar routing patterns. 2. A set of signals performing a common function and carrying similar data. Typically represented using vector notation; for example, address[7:0]. 3. One or more conductors that serve as a common connection for a group of related devices.
clock	The device that generates a periodic signal with a fixed frequency and duty cycle. A clock is sometimes used to synchronize different logic blocks.
comparator	An electronic circuit that produces an output voltage or current whenever two input levels simultaneously satisfy predetermined amplitude requirements.
compiler	A program that translates a high level language, such as C, into machine language.
configuration space	In PSoC devices, the register space accessed when the XIO bit, in the CPU_F register, is set to ‘1’.
crystal oscillator	An oscillator in which the frequency is controlled by a piezoelectric crystal. Typically a piezoelectric crystal is less sensitive to ambient temperature than other circuit components.
cyclic redundancy check (CRC)	A calculation used to detect errors in data communications, typically performed using a linear feedback shift register. Similar calculations may be used for a variety of other purposes such as data compression.
data bus	A bi-directional set of signals used by a computer to convey information from a memory location to the central processing unit and vice versa. More generally, a set of signals used to convey data between digital functions.
debugger	A hardware and software system that allows you to analyze the operation of the system under development. A debugger usually allows the developer to step through the firmware one step at a time, set break points, and analyze memory.
dead band	A period of time when neither of two or more signals are in their active state or in transition.
digital blocks	The 8-bit logic blocks that can act as a counter, timer, serial receiver, serial transmitter, CRC generator, pseudo-random number generator, or SPI.
digital-to-analog (DAC)	A device that changes a digital signal to an analog signal of corresponding magnitude. The analog-to-digital (ADC) converter performs the reverse operation.

Glossary (continued)

duty cycle	The relationship of a clock period high time to its low time, expressed as a percent.
emulator	Duplicates (provides an emulation of) the functions of one system with a different system, so that the second system appears to behave like the first system.
External Reset (XRES)	An active high signal that is driven into the PSoC device. It causes all operation of the CPU and blocks to stop and return to a pre-defined state.
Flash	An electrically programmable and erasable, non-volatile technology that provides you the programmability and data storage of EPROMs, plus in-system erasability. Non-volatile means that the data is retained when power is OFF.
Flash block	The smallest amount of Flash ROM space that may be programmed at one time and the smallest amount of Flash space that may be protected. A Flash block holds 64 bytes.
frequency	The number of cycles or events per unit of time, for a periodic function.
gain	The ratio of output current, voltage, or power to input current, voltage, or power, respectively. Gain is usually expressed in dB.
I^2C	A two-wire serial computer bus by Philips Semiconductors (now NXP Semiconductors). I2C is an Inter-Integrated Circuit. It is used to connect low-speed peripherals in an embedded system. The original system was created in the early 1980s as a battery control interface, but it was later used as a simple internal bus system for building control electronics. I2C uses only two bi-directional pins, clock and data, both running at +5V and pulled high with resistors. The bus operates at 100 kbits/second in standard mode and 400 kbits/second in fast mode.
ICE	The in-circuit emulator that allows you to test the project in a hardware environment, while viewing the debugging device activity in a software environment (PSoC Designer).
input/output (I/O)	A device that introduces data into or extracts data from a system.
interrupt	A suspension of a process, such as the execution of a computer program, caused by an event external to that process, and performed in such a way that the process can be resumed.
interrupt service routine (ISR)	A block of code that normal code execution is diverted to when the M8C receives a hardware interrupt. Many interrupt sources may each exist with its own priority and individual ISR code block. Each ISR code block ends with the RETI instruction, returning the device to the point in the program where it left normal program execution.
jitter	1. A misplacement of the timing of a transition from its ideal position. A typical form of corruption that occurs on serial data streams. 2. The abrupt and unwanted variations of one or more signal characteristics, such as the interval between successive pulses, the amplitude of successive cycles, or the frequency or phase of successive cycles.
low-voltage detect (LVD)	A circuit that senses V_{DD} and provides an interrupt to the system when V_{DD} falls lower than a selected threshold.
M8C	An 8-bit Harvard-architecture microprocessor. The microprocessor coordinates all activity inside a PSoC by interfacing to the Flash, SRAM, and register space.
master device	A device that controls the timing for data exchanges between two devices. Or when devices are cascaded in width, the master device is the one that controls the timing for data exchanges between the cascaded devices and an external interface. The controlled device is called the ***slave device.***

Glossary (continued)

microcontroller	An integrated circuit chip that is designed primarily for control systems and products. In addition to a CPU, a microcontroller typically includes memory, timing circuits, and IO circuitry. The reason for this is to permit the realization of a controller with a minimal quantity of chips, thus achieving maximal possible miniaturization. This in turn, reduces the volume and the cost of the controller. The microcontroller is normally not used for general-purpose computation as is a microprocessor.
mixed-signal	The reference to a circuit containing both analog and digital techniques and components.
modulator	A device that imposes a signal on a carrier.
noise	1. A disturbance that affects a signal and that may distort the information carried by the signal. 2. The random variations of one or more characteristics of any entity such as voltage, current, or data.
oscillator	A circuit that may be crystal controlled and is used to generate a clock frequency.
parity	A technique for testing transmitting data. Typically, a binary digit is added to the data to make the sum of all the digits of the binary data either always even (even parity) or always odd (odd parity).
Phase-locked loop (PLL)	An electronic circuit that controls an ***oscillator*** so that it maintains a constant phase angle relative to a reference signal.
pinouts	The pin number assignment: the relation between the logical inputs and outputs of the PSoC device and their physical counterparts in the printed circuit board (PCB) package. Pinouts involve pin numbers as a link between schematic and PCB design (both being computer generated files) and may also involve pin names.
port	A group of pins, usually eight.
Power on reset (POR)	A circuit that forces the PSoC device to reset when the voltage is lower than a pre-set level. This is a type of hardware reset.
PSoC®	Cypress Semiconductor's PSoC® is a registered trademark and Programmable System-on-Chip™ is a trademark of Cypress.
PSoC Designer™	The software for Cypress' Programmable System-on-Chip technology.
pulse width modulator (PWM)	An output in the form of duty cycle which varies as a function of the applied measurand
RAM	An acronym for random access memory. A data-storage device from which data can be read out and new data can be written in.
register	A storage device with a specific capacity, such as a bit or byte.
reset	A means of bringing a system back to a know state. See hardware reset and software reset.
ROM	An acronym for read only memory. A data-storage device from which data can be read out, but new data cannot be written in.
serial	1. Pertaining to a process in which all events occur one after the other. 2. Pertaining to the sequential or consecutive occurrence of two or more related activities in a single device or channel.
settling time	The time it takes for an output signal or value to stabilize after the input has changed from one value to another.

Glossary (continued)

shift register	A memory storage device that sequentially shifts a word either left or right to output a stream of serial data.
slave device	A device that allows another device to control the timing for data exchanges between two devices. Or when devices are cascaded in width, the slave device is the one that allows another device to control the timing of data exchanges between the cascaded devices and an external interface. The controlling device is called the master device.
SRAM	An acronym for static random access memory. A memory device where you can store and retrieve data at a high rate of speed. The term static is used because, after a value is loaded into an SRAM cell, it remains unchanged until it is explicitly altered or until power is removed from the device.
SROM	An acronym for supervisory read only memory. The SROM holds code that is used to boot the device, calibrate circuitry, and perform Flash operations. The functions of the SROM may be accessed in normal user code, operating from Flash.
stop bit	A signal following a character or block that prepares the receiving device to receive the next character or block.
synchronous	1. A signal whose data is not acknowledged or acted upon until the next active edge of a clock signal. 2. A system whose operation is synchronized by a clock signal.
tri-state	A function whose output can adopt three states: 0, 1, and Z (high-impedance). The function does not drive any value in the Z state and, in many respects, may be considered to be disconnected from the rest of the circuit, allowing another output to drive the same net.
UART	A UART or universal asynchronous receiver-transmitter translates between parallel bits of data and serial bits.
user modules	Pre-build, pre-tested hardware/firmware peripheral functions that take care of managing and configuring the lower level Analog and Digital PSoC Blocks. User Modules also provide high level ***API (Application Programming Interface)*** for the peripheral function.
user space	The bank 0 space of the register map. The registers in this bank are more likely to be modified during normal program execution and not just during initialization. Registers in bank 1 are most likely to be modified only during the initialization phase of the program.
V_{DD}	A name for a power net meaning "voltage drain." The most positive power supply signal. Usually 5 V or 3.3 V.
V_{SS}	A name for a power net meaning "voltage source." The most negative power supply signal.
watchdog timer	A timer that must be serviced periodically. If it is not serviced, the CPU resets after a specified period of time.

Document History Page

Document Title: CY8C27143, CY8C27243, CY8C27443, CY8C27543, CY8C27643, PSoC® Programmable System-on-Chip™ Document Number: 38-12012				
Revision	**ECN**	**Origin of Change**	**Submission Date**	**Description of Change**
**	127087	New Silicon.	7/01/2003	New document (Revision **).
*A	128780	Engineering and NWJ	7/29/2003	New electrical spec additions, fix of Core Architecture links, corrections to some text, tables, drawings, and format.
*B	128992	NWJ	8/14/2003	Interrupt controller table fixed, refinements to Electrical Spec section and Register chapter.
*C	129283	NWJ	8/28/2003	Significant changes to the Electrical Specifications section.
*D	129442	NWJ	9/09/2003	Changes made to Electrical Spec section. Added 20/28-Lead SOIC packages and pinouts.
*E	130129	NWJ	10/13/2003	Revised document for Silicon Revision A.
*F	130651	NWJ	10/28/2003	Refinements to Electrical Specification section and I2C chapter.
*G	131298	NWJ	11/18/2003	Revisions to GDI, RDI, and Digital Block chapters. Revisions to AC Digital Block Spec and miscellaneous register changes.
*H	229416	SFV	See ECN	New datasheet format and organization. Reference the *PSoC Programmable System-on-Chip Technical Reference Manual* for additional information. Title change.
*I	247529	SFV	See ECN	Added Silicon B information to this datasheet.
*J	355555	HMT	See ECN	Add DS standards, update device table, swap 48-pin SSOP 45 and 46, add Reflow Peak Temp. table. Add new color and logo. Re-add pinout ISSP notation. Add URL to preferred dimensions for mounting MLF packages. Update Transmitter and Receiver AC Digital Block Electrical Specifications.
*K	523233	HMT	See ECN	Add Low Power Comparator (LPC) AC/DC electrical spec. tables. Add new Dev. Tool section. Add CY8C20x34 to PSoC Device Characteristics table. Add OCD pinout and package diagram. Add ISSP note to pinout tables. Update package diagram revisions. Update typical and recommended Storage Temperature per industrial specs. Update CY branding and QFN convention. Update copyright and trademarks.
*L	2545030	YARA	07/29/2008	Added note to DC Analog Reference Specification table and Ordering Information.
*M	2696188	DPT/PYRS	04/22/2009	Changed title from " CY8C27143, CY8C27243, CY8C27443, CY8C27543, and CY8C27643 PSoC Mixed Signal Array Final datasheet" to "CY8C27143, CY8C27243, CY8C27443, CY8C27543, CY8C27643 PSoC® Programmable System-on-Chip™". Updated datasheet template. Added 48-Pin QFN (Sawn) package outline diagram and Ordering information details for CY8C27643-24LTXI and CY8C27643-24LTXIT parts
*N	2762501	MAXK	09/11/2009	Updated DC GPIO, AC Chip-Level, and AC Programming Specifications as follows: Modified T_{WRITE} specification. Replaced T_{RAMP} (time) specification with SR_{POWER_UP} (slew rate) specification. Added note [9] to Flash Endurance specification. Added I_{OH}, I_{OL}, DCILO, F32K_U, $T_{POWERUP}$, $T_{ERASEALL}$, $T_{PROGRAM_HOT}$, and $T_{PROGRAM_COLD}$ specifications.
*O	2811860	ECU	11/20/2009	Added Contents page. In the Ordering Information table, added 48 Sawn QFN (LTXI) to the Silicon B parts. Updated 28-Pin package drawing (51-85014)

Document Title: CY8C27143, CY8C27243, CY8C27443, CY8C27543, CY8C27643, PSoC® Programmable System-on-Chip™ Document Number: 38-12012				
Revision	**ECN**	**Origin of Change**	**Submission Date**	**Description of Change**
*P	2899847	NJF/HMI	03/26/10	Added CY8C27643-24LKXI and CY8C27643-24LTXI to Emulation and Programming Accessories on page 52. Updated Cypress website links. Added $T_{BAKETEMP}$ and $T_{BAKETIME}$ parameters in Absolute Maximum Ratings on page 19. Updated AC electrical specs. Updated Note in Packaging Information on page 44. Updated package diagrams. Updated Thermal Impedances, Solder Reflow Specifications, and Capacitance on Crystal Pins. Removed Third Party Tools and Build a PSoC Emulator into your Board. Updated Ordering Code Definitions on page 54. Updated Ordering Information table. Updated links in Sales, Solutions, and Legal Information.
*Q	2949177	ECU	06/10/2010	Updated content to match current style guide and datasheet template. No technical updates
*R	3032514	NJF	09/17/10	Added PSoC Device Characteristics table . Added DC I^2C Specifications table. Added F_{32K_U} max limit. Added Tjit_IMO specification, removed existing jitter specifications. Updated Analog reference tables. Updated Units of Measure, Acronyms, Glossary, and References sections. Updated solder reflow specifications. No specific changes were made to AC Digital Block Specifications table and I^2C Timing Diagram. They were updated for clearer understanding. Updated Figure 13 since the labelling for y-axis was incorrect. Template and styles update.
*S	3092470	GDK	11/22/10	Removed the following pruned parts from the datasheet. CY8C27643-24LFXIT CY8C27643-24LFXI
*T	3180303	HMI	02/23/2011	Updated Packaging Information.
*U	3378917	GIR	09/28/2011	The text “Pin must be left floating” is included under Description of NC pin in Table 8 on page 14. Updated Table 42 on page 50 for improved clarity. Removed Footnote # 31 and its reference under Table 42 on page 50. Removed inactive part CY8C27643-24LKXI from Table 43 on page 52.

Sales, Solutions, and Legal Information

Worldwide Sales and Design Support

Cypress maintains a worldwide network of offices, solution centers, manufacturer's representatives, and distributors. To find the office closest to you, visit us at Cypress Locations.

Products

Automotive	cypress.com/go/automotive
Clocks & Buffers	cypress.com/go/clocks
Interface	cypress.com/go/interface
Lighting & Power Control	cypress.com/go/powerpsoc
	cypress.com/go/plc
Memory	cypress.com/go/memory
Optical & Image Sensing	cypress.com/go/image
PSoC	cypress.com/go/psoc
Touch Sensing	cypress.com/go/touch
USB Controllers	cypress.com/go/USB
Wireless/RF	cypress.com/go/wireless

PSoC Solutions

psoc.cypress.com/solutions

PSoC 1 | PSoC 3 | PSoC 5

© Cypress Semiconductor Corporation, 2003-2011. The information contained herein is subject to change without notice. Cypress Semiconductor Corporation assumes no responsibility for the use of any circuitry other than circuitry embodied in a Cypress product. Nor does it convey or imply any license under patent or other rights. Cypress products are not warranted nor intended to be used for medical, life support, life saving, critical control or safety applications, unless pursuant to an express written agreement with Cypress. Furthermore, Cypress does not authorize its products for use as critical components in life-support systems where a malfunction or failure may reasonably be expected to result in significant injury to the user. The inclusion of Cypress products in life-support systems application implies that the manufacturer assumes all risk of such use and in doing so indemnifies Cypress against all charges.

Any Source Code (software and/or firmware) is owned by Cypress Semiconductor Corporation (Cypress) and is protected by and subject to worldwide patent protection (United States and foreign), United States copyright laws and international treaty provisions. Cypress hereby grants to licensee a personal, non-exclusive, non-transferable license to copy, use, modify, create derivative works of, and compile the Cypress Source Code and derivative works for the sole purpose of creating custom software and or firmware in support of licensee product to be used only in conjunction with a Cypress integrated circuit as specified in the applicable agreement. Any reproduction, modification, translation, compilation, or representation of this Source Code except as specified above is prohibited without the express written permission of Cypress.

Disclaimer: CYPRESS MAKES NO WARRANTY OF ANY KIND, EXPRESS OR IMPLIED, WITH REGARD TO THIS MATERIAL, INCLUDING, BUT NOT LIMITED TO, THE IMPLIED WARRANTIES OF MERCHANTABILITY AND FITNESS FOR A PARTICULAR PURPOSE. Cypress reserves the right to make changes without further notice to the materials described herein. Cypress does not assume any liability arising out of the application or use of any product or circuit described herein. Cypress does not authorize its products for use as critical components in life-support systems where a malfunction or failure may reasonably be expected to result in significant injury to the user. The inclusion of Cypress' product in a life-support systems application implies that the manufacturer assumes all risk of such use and in doing so indemnifies Cypress against all charges.

Use may be limited by and subject to the applicable Cypress software license agreement.

PSoC Designer™ and Programmable System-on-Chip™ are trademarks and PSoC® and CapSense® are registered trademarks of Cypress Semiconductor Corporation.

Purchase of I^2C components from Cypress or one of its sublicensed Associated Companies conveys a license under the Philips I^2C Patent Rights to use these components in an I^2C system, provided that the system conforms to the I^2C Standard Specification as defined by Philips. As from October 1st, 2006 Philips Semiconductors has a new trade name - NXP Semiconductors.

All products and company names mentioned in this document may be the trademarks of their respective holders.