Datasheet

11859.1
STL 990/16/5,08-G GN
STL 990/16/5,08-G GN

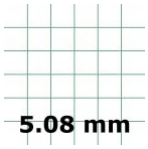

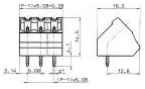

Male pin block, No. of poles: 16, Width: 82.48 mm, Colour: Green

Business data

Connector version	Attached plug-in connector
Packaging unit	50
Quantity unit	PC
Packaging type	Carton
Type of banding	Without
Weight per piece (not including packaging)	7.6
Weight per piece (including packaging)	9.58
Unit of weight	G
Customs number	85366930
Country of origin	QU

Datasheet

11859.1
STL 990/16/5,08-G GN
STL 990/16/5,08-G GN

Technical Data

Dimensions	
Length	16.5 mm
Length of the pin	4.1 mm
Width	82.48 mm
Width left	3.14 mm
Width right	3.14 mm
Height	14.5 mm
Drill hole diameter	1.4 mm
Diameter of connecting pin	1 mm
Pitch	5.08 mm

Ratings	
Rated voltage	250 V
Rated current	10 A
Rated impulse voltage	4 kV
Overvoltage category	III
Contamination degree	3

© **CONTA-CLIP Verbindungstechnik GmbH** | Otto-Hahn-Str. 7 | D-33161 Hövelhof
Fon +49 (0) 52 57.98 33-0 | Fax +49 (0) 52 57.98 33-33 | E-Mail info@conta-clip.de | conta-clip.de

Creation date 04.06.2020 07:17:31
Subject to technical modifications

Datasheet

11859.1
STL 990/16/5,08-G GN
STL 990/16/5,08-G GN

Technical Data

Connection data	
Angle of PCB/contact	45°/135° (slanted upwards)
Number of plug-in rows	1
No. of poles	16

Materials	
Insulation housing	Polyamide 6.6
Flammability class UL 94	V-0
Working temperature, min.	-30 °C
Working temperature, max.	105 °C
Contact pin	Copper alloy

11859.1
STL 990/16/5,08-G GN
STL 990/16/5,08-G GN

Technical Data

Further technical data

Storage temperature, min.	-40 °C
Storage temperature, max.	105 °C
Insulation resistance	1*10^13 Ohm x cm
Creepage-current resistance	CTI 600
Glow wire flammability index GWFI	GWFI 850
GWFI after-glow time	30 Sek.
Glow wire ignition temperature GWIT	GWIT 775 °C
GWIT exposure time	5 Sek.
Plug-in cycles acc. to standard	100
Recommended wave soldering temperature	265 °C
Recommended wave soldering duration, min.	3 Sek.
Recommended wave soldering duration, max.	4 Sek.

© **CONTA-CLIP Verbindungstechnik GmbH** | Otto-Hahn-Str. 7 | D-33161 Hövelhof
Fon +49 (0) 52 57.98 33-0 | Fax +49 (0) 52 57.98 33-33 | E-Mail info@conta-clip.de | conta-clip.de

Creation date 04.06.2020 07:17:31
Subject to technical modifications

11859.1
STL 990/16/5,08-G GN
STL 990/16/5,08-G GN

Approvals

cUL Recognized

cUL Recognized	CSA 22.2 No.158
cUL Recognized	✓
cUL Usegroup B: rated voltage	300 V
cUL Usegroup B: rated current	15 A
cUL Usegroup C: rated voltage	150 V
cUL Usegroup C: rated current	15 A
cUL Usegroup D: rated voltage	300 V
cUL Usegroup D: rated current	10 A
cUL wire material	Cu

UL Recognized

UL Recognized	UL 1059
UL Recognized granted	✓
UL Usegroup B: rated voltage	300 V
UL Usegroup B: rated current	15 A
UL Usegroup C: rated voltage	150 V
UL Usegroup C: rated current	15 A
UL Usegroup D: rated voltage	300 V
UL Usegroup D: rated current	10 A

© **CONTA-CLIP Verbindungstechnik GmbH** | Otto-Hahn-Str. 7 | D-33161 Hövelhof
Fon +49 (0) 52 57.98 33-0 | Fax +49 (0) 52 57.98 33-33 | E-Mail info@conta-clip.de | conta-clip.de

11859.1
STL 990/16/5,08-G GN
STL 990/16/5,08-G GN

Approvals

UL Recognized

UL wire material	Cu
UL factory wiring	✓

VDE approval

VDE approval	DIN EN 61984
VDE approval granted	✓
VDE rated voltage	250 V
VDE rated current	10 A
VDE rated impulse voltage	4 kV
VDE overvoltage category	III
VDE contamination degree	3

Datasheet

11859.1
STL 990/16/5,08-G GN
STL 990/16/5,08-G GN

Media

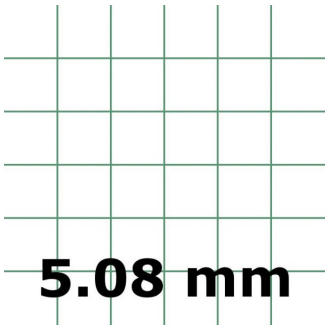

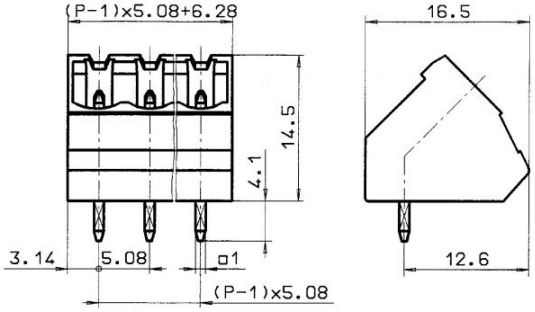

© **CONTA-CLIP Verbindungstechnik GmbH** | Otto-Hahn-Str. 7 | D-33161 Hövelhof
Fon +49 (0) 52 57.98 33-0 | Fax +49 (0) 52 57.98 33-33 | E-Mail info@conta-clip.de | conta-clip.de

Creation date 04.06.2020 07:17:31
Subject to technical modifications